220MHz FM TRANSCEIVER

# TM-3530A

# SERVICE MANUAL

KENWOOD

TRIO-KENWOOD CORPORATION


B51-2083-00(O)1228

$15.00


## CONTENTS


CIRCUIT DESCRIPTION . . . . . 2
PARTS LIST . . . . . 16
DISASSEMBLY . . . . . 30
ADJUSTMENT . . . . . 31
PC BOARD VIEWS
- MIC AMP. (X59-1000-10) . . . . . 34
- MIC AMP., S-METER (X59-1010-10) . . . . . 34
- ALERT, VACANT CH. (X59-1020-10) . . . . . 34
- CENTER DETECTOR (X59-1030-10) . . . . . 34
- SQUELCH OCNTROL (X59-1040-10) . . . . . 34
- COMPOUND UNIT (X60-1290-10) . . . . . 34
- CONTROL UNIT (X53-1440-11) . . . . . 34
- PLL UNIT (X50-2040-10) . . . . . 34
- DISPLAY UNIT (X54-1860-11) . . . . . 35
- FINAL UNIT (X45-1460-10) . . . . . 35

TERMINAL FUNCTION . . . . . 35
BLOCK DIAGRAM . . . . . 36
SCHEMATIC DIAGRAM . . . . . 37
LEVEL DIAGRAM . . . . . 38
MU-1 (MODEM UNIT) . . . . . 38
MB-10 (MOBILE MOUNT) . . . . . 38
TU-7 (TONE UNIT) . . . . . 39
PG-2K (DC POWER CABLE) . . . . . 40
VS-1 (VOICE SYNTHESIZER) . . . . . 41
PACKING . . . . . 42
SPECIFICATIONS . . . . . BACK COVER

# CIRCUIT DESCRIPTION

| | TM-3530A |
|---|---|
| FINAL UNIT | X45-1460-10 |
| PLL UNIT | X50-2040-10 |
| CONTROL UNIT | X53-1440-11 |
| DISPLAY UNIT | X54-1860-11 |
| COMPOUND UNIT | X60-1290-10 |

**Table 1 TM-3530A PC board chart**

## RX SECTION

Signals from the antenna are applied to the FINAL unit (X60-1290-10) transmit receive switching circuit, D2 and D4. In receive, diodes D2 and D4 are reverse biased forcing the incoming receive signal down thru L3 to the RA (Receive Antenna) terminal. There the incoming receive signal is then coupled to the COMPOUND Unit (X60-1290-10) The signal is filtered by low pass filter and amplified by Q1 the first RF amplifier, a GaAs FET : 3SK129(S). The amplified RF signal is then mixed with the LR (Receiver Local Oscillator) signal in the first mixer Q2 : 3SK74(L) to obtain the First IF frequency of 20.935MHz. This IF signal is filtered by Helical Resonator, L4, and a two stage MCF (Monolithic Crystal Filter), L8, which combine to provide excellent two-signal characteristics and sensitivity.

The First IF signal from the MCF is then amplified by the First IF amplifier Q3 : 2SC2668(Y) and applied to the FM IF Amplifier/Mixer/Detector, IC2 : TA7761P. This signal IC mixes the IF signal with the 20.48MHz 2nd Local Oscillator signal (L14) to obtain the 2nd IF frequency of 455kHz, then amplifies, routes the signal thru external filter L16, and finally convertes it into the received audio signal with the internal quadrature detector. The 2nd Local Oscillator signal from L14 and IC2 is also used by the PLL unit as a Reference signal.

The detected audio output from IC2 is applied to the SQUELCH CONTROL (X59-1040-10), and to the de-emphasis circuit R56 and C99. The (de-emphasized) audio is amplified by Audio preamplifier Q9 : 2SC2458(Y) and then applied thru the AF GAIN control to the Audio Amplifier IC1 : μPC1241H which drives the speaker.

The noise component of the detected audio is filtered by a band-pass filter, in order to obtain a frequency of approximately 30kHz (which is well outside the normal voice bandwidth) and then amplified by the noise amplifiers contained inside IC2. This amplified noise is rectified by diodes D6 and D5 and applied to Q1 of the Squelch Switch. Q1 is used to control the conduction of Q2, which controls AF Preamp Q9.

A center-stop tuning circuit is provided to ensure that the incoming signal is actually on frequency before the squelch is opened. A portion of the 455kHz IF signal is coupled thru the secondary of L17 and applied to CENTER STOP unit (X59-1030-10) where Ceramic Discriminator L12, and Window comparator IC1 : NJM4558M are used to determine if the incoming signal is actually the channel center. When the detected signal applied to the window comparator reaches a predetermined level, Q5 of the Squelch Switch will be turned OFF or ON. The Squelch Switch determines if there is an incoming signal at the same time. If the incoming signal is at the proper level, and on frequency, the squelch will open and the C.TUNE indicator in the LCD display will turn ON. This indicator is controlled by IC2, the main microprocessor on the CONTROL unit (X53-1440-11), thru inputs supplied from the COMPOUND unit via the BD line. During Open Channel Scanning of the DCL system Q3, Q1, and Q2 of the Squelch Switch are controlled by the main microprocessor via the SQS line. During DCL operations open channel search threshold levels are controlled by VR3 of the Compound ass'y. Transistor Q6 of the Squelch Switch, is used to prevent the Center Stop circuit from activating during Open Channel Scan Operation.

**Note 1 :**

The Center Stop circuit is not activated during Open Channel Scan.

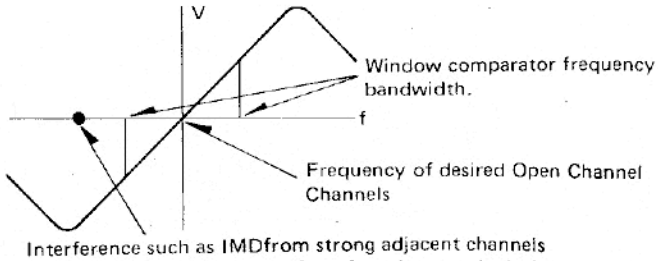


Interference such as IMDfrom strong adjacent channels makes the use of the Center Stop function erratic during Open channel scan.

**Fig. 1**

Audio Preamplifier Q9 is controlled by Q1 of the Alert, Vacant CH. unit (X59-1020-10) during Alert, code Squelch and Open Channel operations.

# CIRCUIT DESCRIPTION

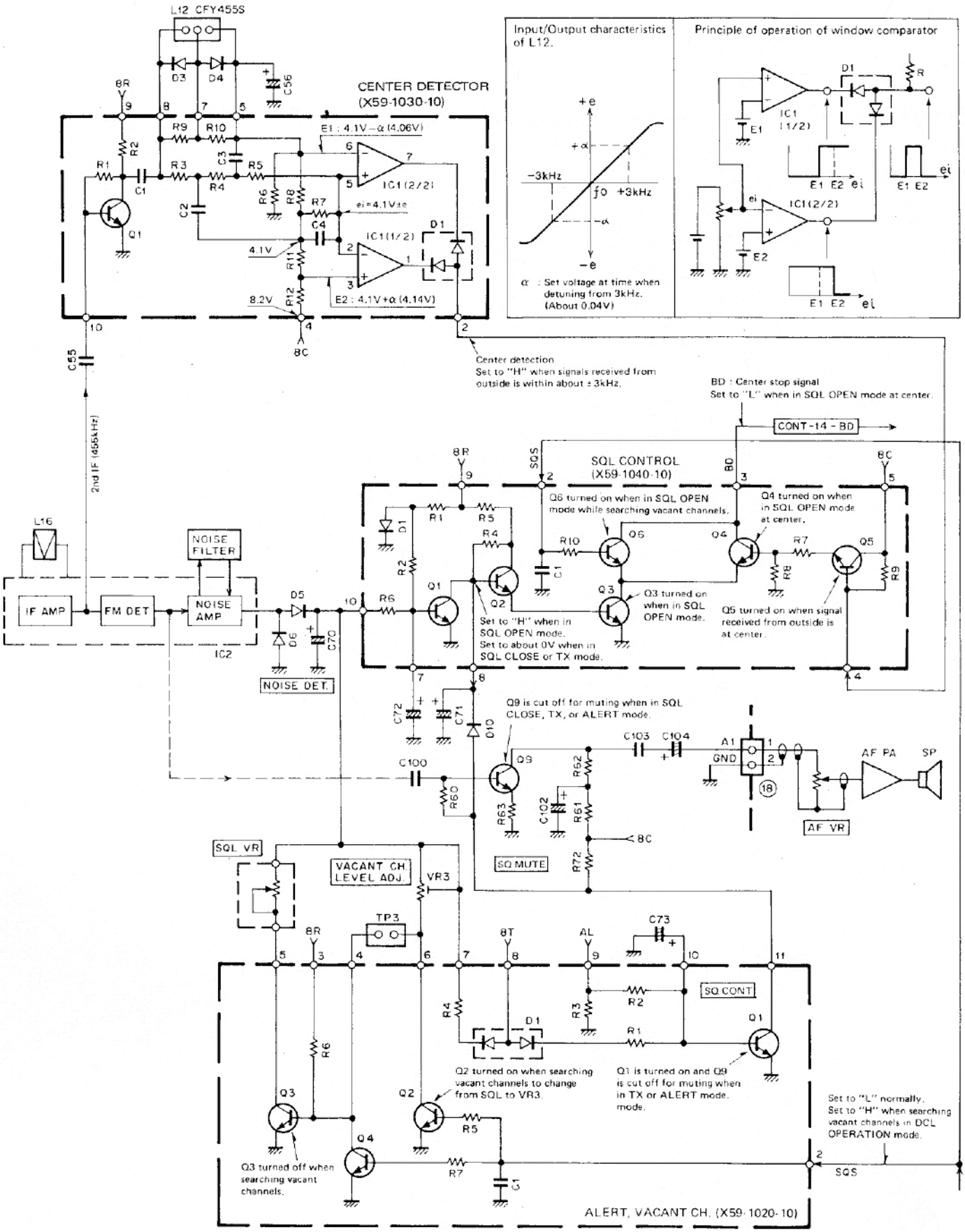


Fig. 2 Center detector, Alert, Vacant CH, SQL control circuit

# CIRCUIT DESCRIPTION

| Item | Rating |
|---|---|
| Nominal center frequency (fo) | 20.935MHz |
| Pass bandwidth | ±7.5kHz or more at 3dB |
| Attenuation bandwidth | ±25kHz or less at 40dB<br>±45kHz or less at 60dB |
| Guraranteed attenuation | 1. 70dB or more within ±1MHz<br>2. Spurious level = 35dB or more at fo−fo + 500kHz<br>3. Spurious level = 80dB or more at fo ± (890−930kHz) |
| Ripple | 1.0dB or less |
| Loss | 2.0dB or less |
| Impedance | 1.1kΩ//0.5pF |

**Table 2 MCF (L71-0251-05) COMP unit L8**

| Item | Rating |
|---|---|
| Nominal center frequency (fo) | 455kHz |
| 6dB bandwidth | ±6kHz or more |
| 50dB bandwidth | ±12.5kHz or more |
| Ripple (within 455±5kHz) | 3dB or less |
| Loss | 6dB or less |
| Guaranteed attenuation (within 455±100kHz) | 35dB or more |
| Input and output impedance | 2.0kΩ |

**Table 3 Ceramic filter (L72-0315-05) COMP unit L16**

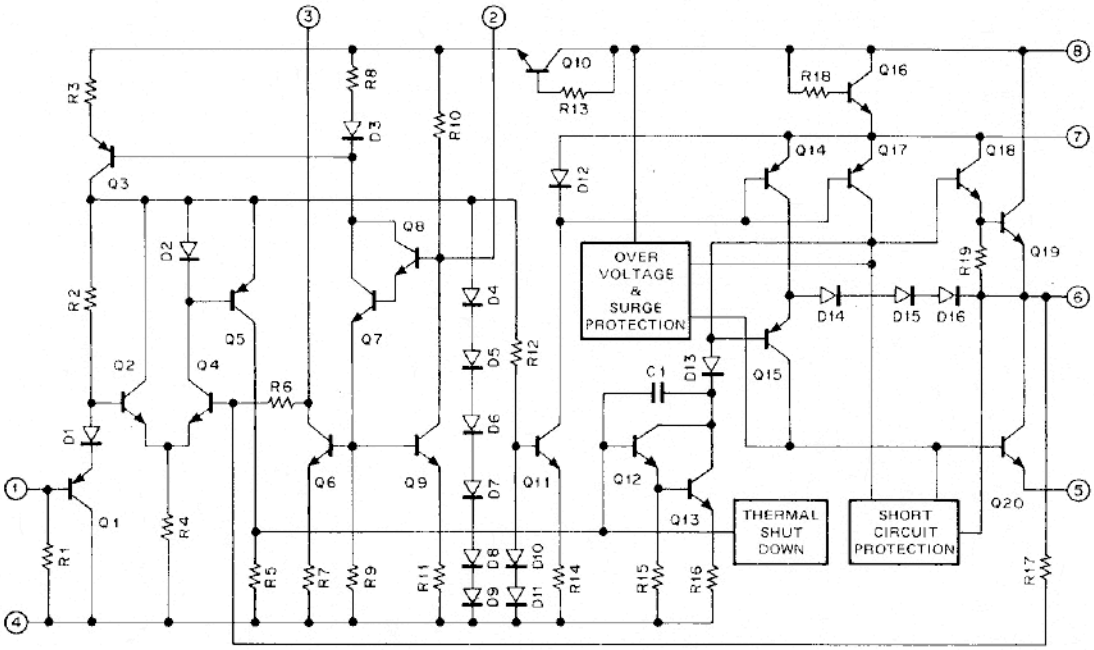


**Fig. 3 μPC1241H Equivalent circuit (COMP unit IC1)**

## TX SECTION

Incoming microphone audio from the DISPLAY unit (X54-1860-11 C/3) is amplified by Q8 : 2SC1775(E). This amplified audio is then buffered by buffer amplifier Q7 : 2SC2458(Y) and applied to D2 : 1SS181 of the MIC AMP/S METER unit (X59-1010-10) for limiting. The signal is then amplified by a portion of IC1 : NJM4558M on the MIC AMP/S METER unit. D2 of the MIC AMP unit (X59-1000-10) provides additional limiting. The microphone audio is filtered by a 2 stage active LPF, IC1 : NJM4558M and applied to varactor diode D3 : 1S2208 in the PLL unit (X50-2040-10) for phase modulation of the transmit VCO, Q8.

The phase-modulated FM signal is amplified by driver transistors Q10 : 2SC2688(Y), Q11 : 2SC2347 and Q12 : 2SC2407(I) and applied to the FINAL unit (X45-1460-10).

This signal is amplified by the Hybrid Final Amplifier Module Q1 : M57774 and applied to the antenna via the transmit/receive switching diode D2. During transmit, forward bias is applied to D2 allowing the transmit signal to pass. Diode D3 is also forward biased during transmit. The value of L3 was selected to present a high impedance to the transmitted signal. Any of the transmit signal that passes thru L3 is shunted to ground thru D3 to protect the receiver circuits and prevent feedback. Once the signal has been passed thru D2 it proceedes thru the LPF and to the antenna.

The APC (Automatic Protection Circuit) on the FINAL unit consists of two circuit, a negative feedback circuit that senses output power and an SWR protection circuit.

# CIRCUIT DESCRIPTION

The negative feedback circuit samples the transmitted signal, rectifies this signal with D4, and applies the rectified signal to NF GAIN amplifier Q6 : 2SC2458(Y). This amplifier supplies a signal to Differential Amplifiers Q4 and Q5 : 2SC2458(Y) which control the bias applied to the PA module pin 2, and driver transistor Q12 of the PLL unit, via bias regulators Q2 : 2SD1406(Y) and Q3 : 2SA1015(Y). High/Low power switching is accomplished by applying a ground to pin number 1 of connector (2) on the FINAL unit. This causes VR3 to act as a voltage divider that controls the conduction of NF GAIN amplifier Q6.
Reflected power is coupled thru D5 on the FINAL unit and is used to control the conduction of Q7. This transistor function like Q6 to control differential amplifies Q4 and Q5, and thus the bias applied to the Power Amplifier.

| Item | Symbol | Tc (°C) | Condition | Rating |
|---|---|---|---|---|
| Operating | Vcc | 25 | | 17V |
| DC current | Icc | 25 | | 7A |
| Operating case temp. | Tc (op) | | | −30~+110°C |
| Storage temp. | Tstg | | | −40~+110°C |
| Power input | Pin | 25 | Zg = ZI = 50Ω<br>Vcc1 ≦ 12.5V | 0.6W |
| Power output | Po | 25 | Zg = ZI = 50Ω | 40W |

**Table 4 M57774 Max. rating (TM-3530A Final unit Q1)**

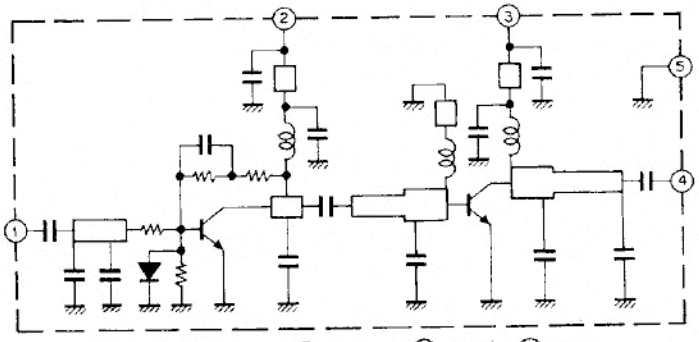


**Fig. 4 M57774 Equivalent circuit**

## PLL CIRCUIT

The PLL circuit is divided into two main loops : transmit and receive.

### Receive PLL Loop

The signal generated by the RX VCO (Voltage Controlled Oscillator) Q16 : 2SK125 is applied to buffer amplifier Q17 : 2SC2668(Y) and mixed with the HET (Heterodyne) signal by Q21 : 2SC2668(Y) where it becomes the PLL IF signal (12.865 to 17.86MHz). This PLL IF signal is then amplified by Q20 : 2SC2668(Y) and applied to the Phase Detector IC2 : MC145155P*K where it is divided to obtain a 5kHz signal. The divide ratio is determined by Serial Data from the CONTROL unit. This 5kHs signal is compared with 5kHz reference signal obtained by dividing 20.480 MHz Reference signal.
The Phase Detector compares the phase of these two signals and transmits an error control signal to the VCO. The control signal is filtered by an Active Low Pass filter composed of Q13 : 2SK30A(O) and Q14 : 2SC2458(Y) to remove any AC fluctuations to obtain a DC correction voltage. The correction voltage is used to change the capacitance of Varactor Diode D5 : 1SV50, which varies the output of the RX VCO to lock it on frequency.
If the phase difference is too great to be corrected by the control voltage applied to D5, an unlock signal is generated by the Phase Detector. This signal turns OFF Q15 : 2SC2458(Y) which turns OFF output amplifier Q18 : 2SC2668(Y) to prevent operation outside the authorized limits.
The PLL HET Oscillator, Q19 : 2SC2787(L) oscillates at 46.55MHz. This signal is applied to frequency quad Q22 : 2SC2688(Y) to obtain a signal of 186.200MHz which is applied to mixer Q21.

# CIRCUIT DESCRIPTION

**Transmit PLL Loop**

The signal generated by the TX VCO Q8 : 2SK125 (220.00 to 224.995MHz) is mixed with the RX PLL output, by Q7 : 2SC2668(Y) and applied to the Transmit Phase Detector IC1 : MC145151P.

This signal and the 20.48MHz signal from IC2 are divided by 512, to obtain 40kHz. These two signals are compared and an error correction signal is applied to the Active Low Pass filter Q3, Q4 and Q5 : 2SC1775(E). Comparision at a frequency of 40kHz provides shorter response times, a real necessity in transmit. The DC correction voltage from the LPF is used to control varactor diode D2 : 1SV50.

The divide ratio is increased by 91 during transmit operations. This causes the TX VCO frequency to be locked at a frequency 455kHz higher than the RX VCO frequency which prevents internal mixing. When an error occurs that is greater than the correction voltage limits an unlock signal is generated by IC1. This signal controls the conduction of Q1 : 2SC2458(Y) which controls Q2 : 2SA1048(Y) to stop transmissions. Q2 interrupts the bias of the TX driver stage.

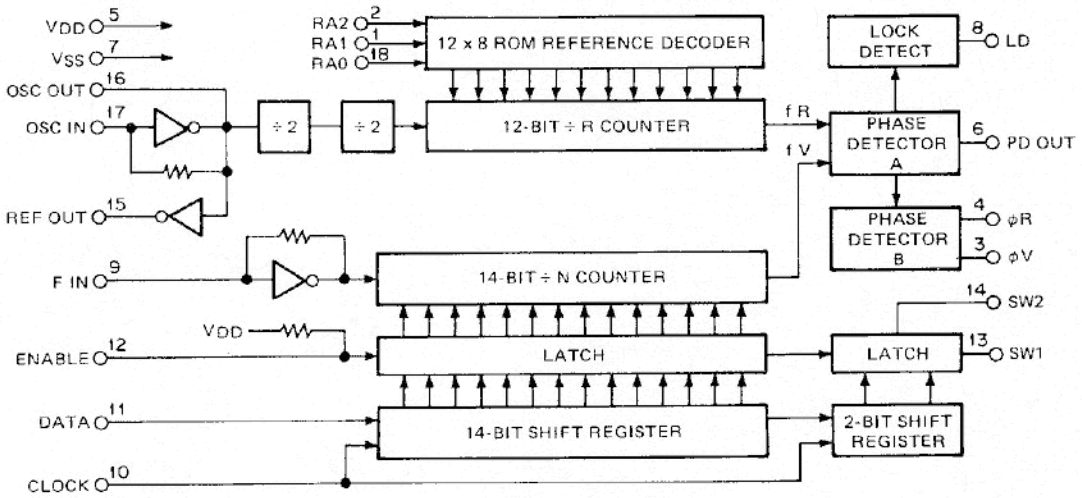


Fig. 5 MC145155P*K Block diagram (PLL unit IC2)

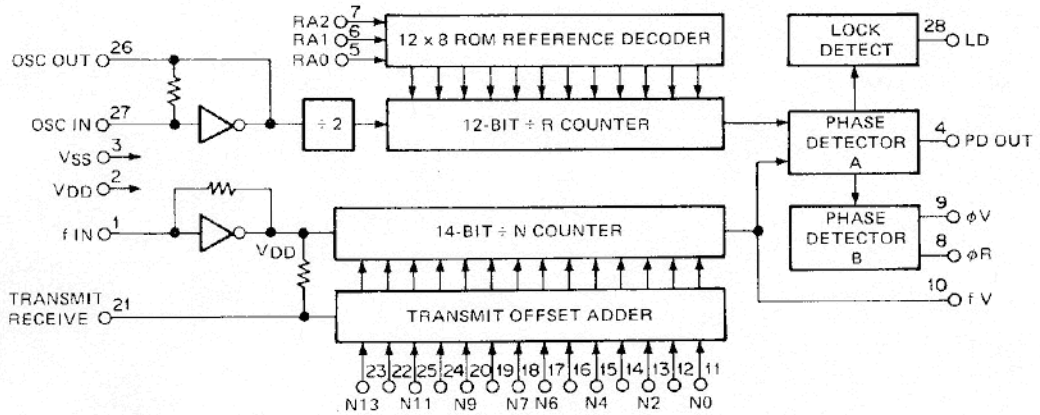


Fig. 6 MC145151P*J Block diagram (PLL unit IC1)

# CIRCUIT DESCRIPTION

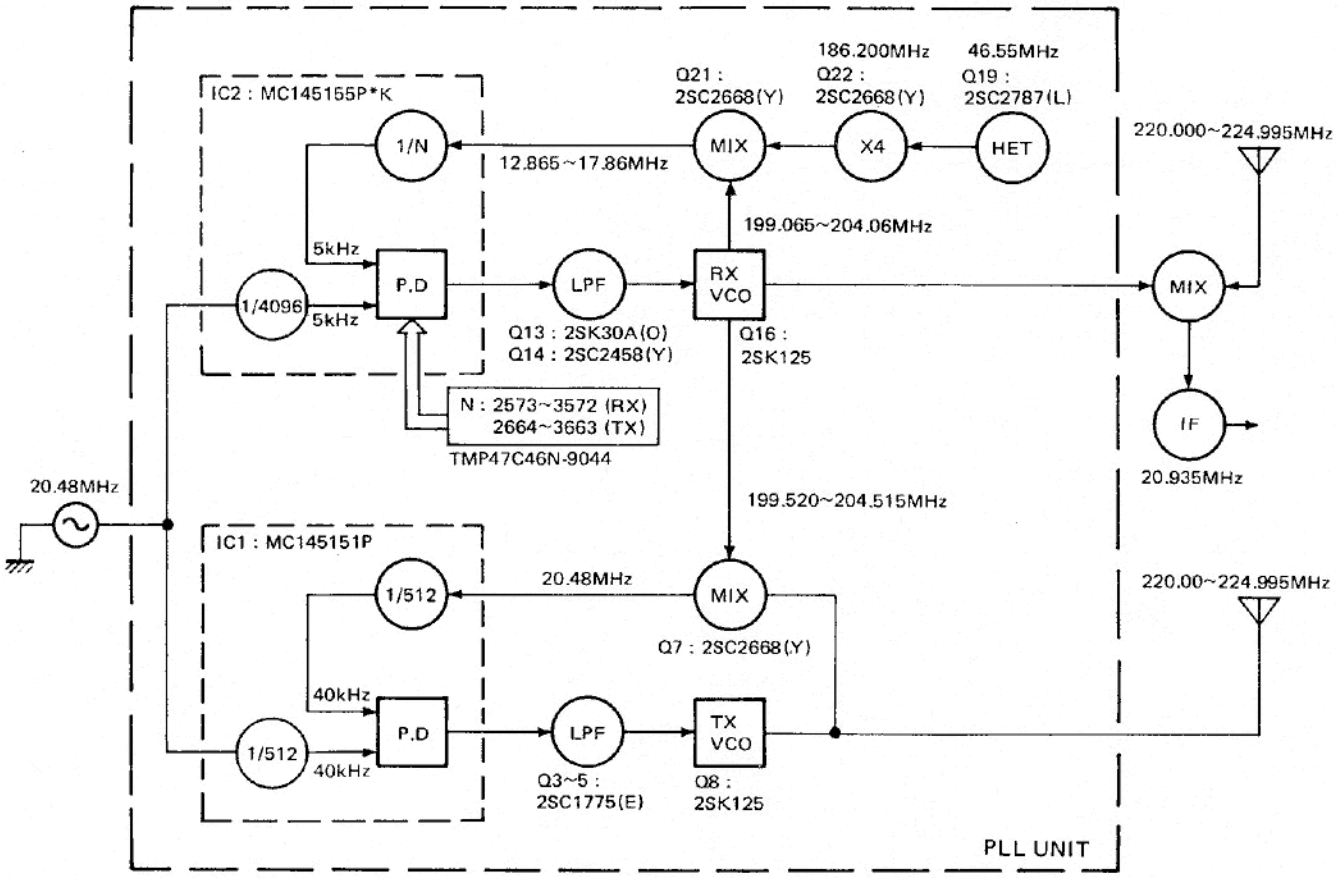


Fig. 7 Frequency-related block diagram

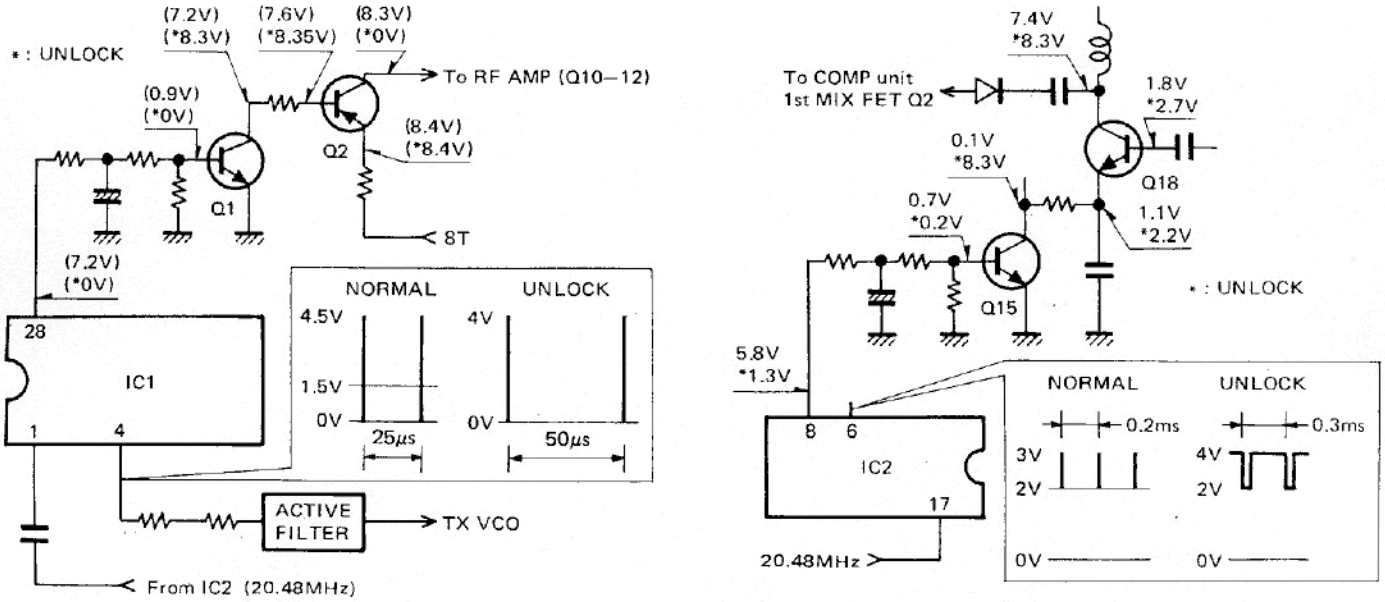


Fig. 8 Unlock circuit

# CIRCUIT DESCRIPTION

## CONTROL UNIT (X53-1440-11)

The CONTROL unit uses two Microprocessors. the Main Microprocessor IC2 : TMP47C46N-9044 and Auxilliary Microprocessor IC3 : μPD75008HC-056. Both utilize 4 bit architecture and have 4K Bytes of ROM available.

The Main Microprocessor controls; frequency, offset, tone, memory frequency, key, switch, encoder, frequency display, DCL system and the Auxilliary Microprocessor. The Auxilliary Microprocessor controls; the voice synthesizer, display/contrl/and memory for telephone number functions, tone frequencies, audio oscillator, and digital signal conversion and analysis processing for DCL system.

The Main Microprocessor utilizes a serial interface bus to the Auxilliary processor. A CMOS static RAM, IC6 : TC5047AP-1 with a capacity of 1K x 4 bits, is used for external memory storage of operator programmed data such as memory frequencies and telephone number data. It also functions as a data buffer when exchanging data between the Main and Auxilliary processors. Memory addressing is performed by IC5 : TC40H374P with read and write operations being handled by the Data Bus.

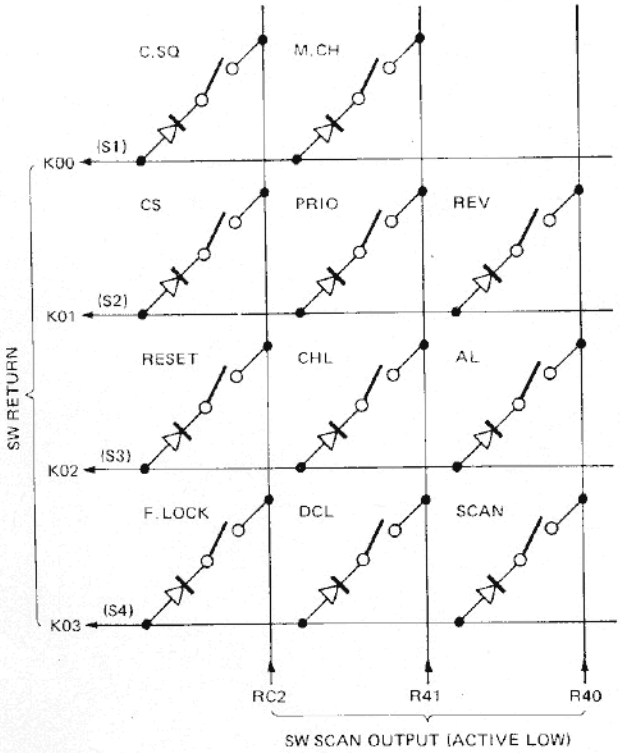


Fig. 9 Diode matrix

### Switch Section

With a few exceptions most switch inputs on the front panel are arranged in a diode matrix. The Main Microprocessor reads the inputs via a keyboard status scan system. This system determines which key, if any, has been depressed.

The diode matrix is illustrated in Fig. 9.

The PHONE switch, TONE switch, PTT switch, UP switch and DOWN switch all supply inputs directly to the Main Microprocessor.

### Keyboard section

Fig. 11 illustrates the keyboard section circuit diagram. The keyboard receives scan pulses from the Main Microprocessor ports P10 thru P13. The current keyboard status is returned via ports R70 thru R73. Pull-up resistors of P10 thru P13 are controlled by port R90. Keyboard status is scanned when R90 is pulled up from logic low by Q3 : DTA114YF.

### Display section

Fig. 11 shows the layout of the LCD.

The LCD driver (Keyboard ass'y) is controlled via 8 data lines and 4 control lines on a parallel bus system by the Main and Auxilliary microprocessors.

Data transfer is possible only when the CS line is Low and in conjuction with the leading edge of the WE pulse. The DCL and CQS LED's are lit by transistors Q4 and Q5 which are controlled by the Main Microprocessor.

# CIRCUIT DESCRIPTION

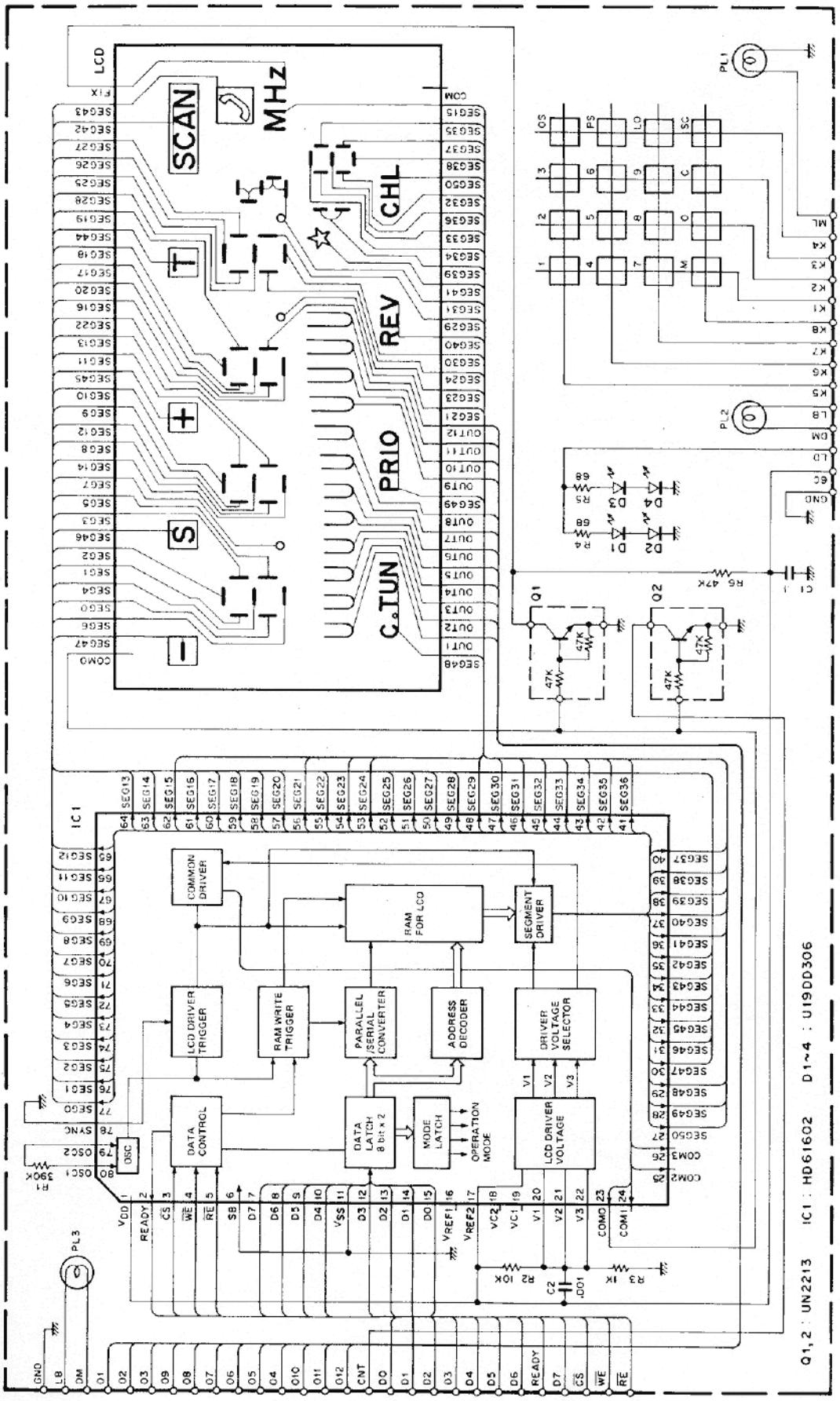


Fig. 10 Keyboard section circuit diagram

# CIRCUIT DESCRIPTION

**DTMF circuit**

The DTMF (Dual Tone Multiple Frequency) signal is generated by IC4 : LR4087 on the CONTROL unit. Power for the tone generator is obtained from the 8T (8 volts on transmit) line. During receive the IC is grounded preventing unwanted tone generation.

During transmit the non-exclusive port R90 is a logic High, causing pull-up resistors P10 thru P13 to open allowing the DTMF signals to be generated by pressing one of the keyboard keys.

During automatic transmission of telehphone number information port R90 is a logic Low, connecting pull-up resistors P10 thru P13. P10 thru P13 apply a logic High, and P70 thru P73 a logic low, so that the desired DTMF signals are generated. While the DTMF signal is being generated IC4 (CONTROL unit) mutes the normal transmitted audio.

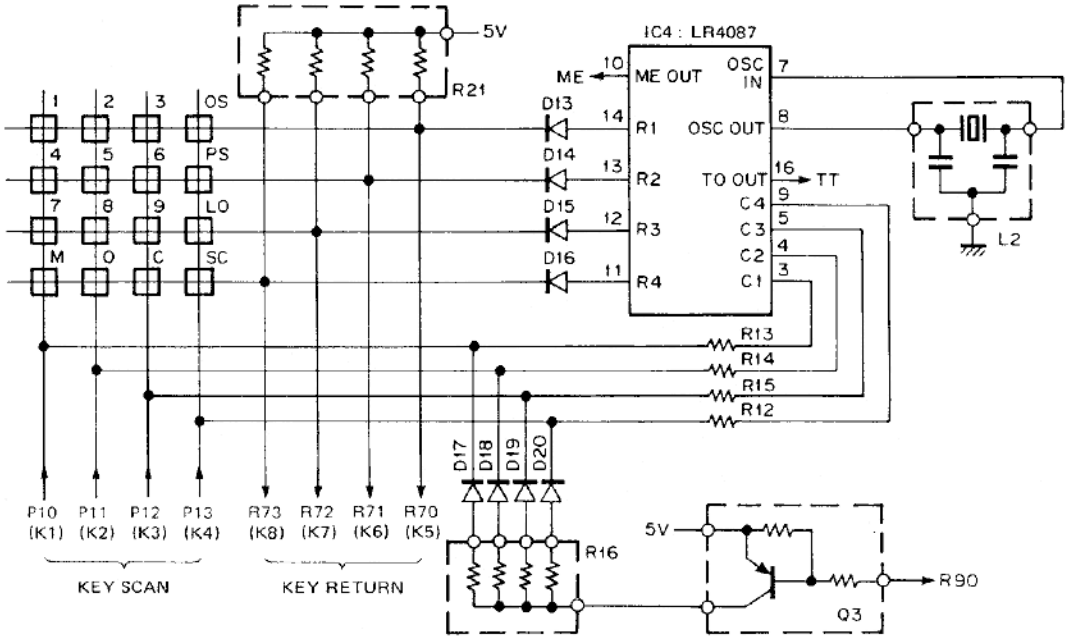


Fig. 11 DTMF circuit

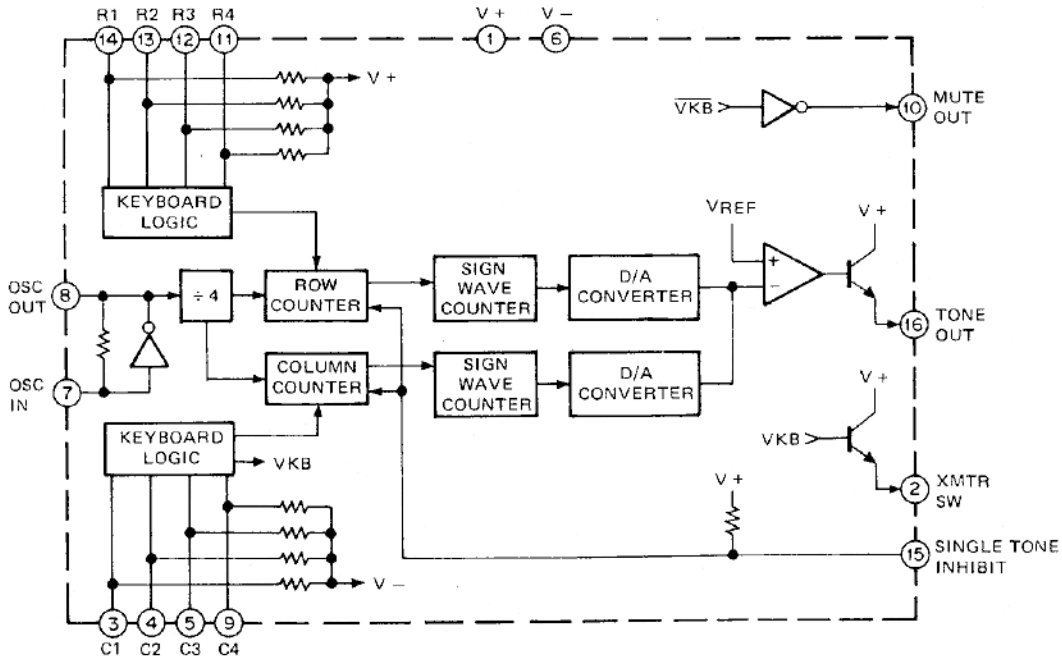


Fig. 12 LR4087 Block diagram (Control unit IC4)

# CIRCUIT DESCRIPTION

### PLL and Tone data

PLL and Tone data are sent from the Main Microprocessor on P30 and the Clock signal is on P33. Data and Clock signals are used concurrently. The Enable signal is transmitted on P21 for PLL data and on RC3 for tone data.

### Audio Oscillator (CONTROL unit)

An audible confirmation of various keyboard inputs is provided by the TM-2530/50. This audio output is controlled via line P21 of the Auxilliary Microprocessor, IC3. The Oscillator is a portion of IC1 : MC14584BCP and its output is supplied to the COMPOUND unit via the BZ line.

### Voice Synthesizer Control Section

The Main Microprocessor (IC2) analyzes inputs from the VOICE unit, and provides control information to the Auxilliary Microprocessor (IC3) necessary for processing the Voice data.

The Auxilliary Microprocessor provides control input and output via data lines PS0 thru PS4, SR and BY.

### Rotary Encoder Section

Fig. 13 shows the encoder output waveforms. Waveform B is used as a reference. The phase of waveform A is compared with that of waveform B to determine if the dial base been turned clockwise or counterclockwise. A portion of IC1 is used as a Schmitt trigger to filter out any chattering of the encoder contacts. The inverted waveforms from IC1 are applied to the Main Microprocessor on pins RP0 and RP1, where the phase of the waveforms is compared. the number of input pulses is also counted by the microprocessor to detemine how much of a frequency change has been ordered.

### Other Input and Output Sections

1) Standby or push-to-talk
   PTT switch status is sent to the Main Microprocessor via the SS terminal on PS1. During manual or automatic transmission a logic Low is supplied on the RA2 line to the COMPOUND unit. This signal turns on the transmit voltage regulator and turns OFF the receive voltage regulator.
2) Microphone UP/DOWN switches
   Any switch chattering (Keyboard) is filtered by C11 and C12 and the inputs from the UP and DOWN switch are applied to the Main Microprocessor on pins RB3 and RB2 for processing.
3) Busy indicator (BD)
   A signal is supplied from the COMPOUND unit Center Tune circuit to the Main Microprocessor via pin RB2 to indicate when the radio has received an input and squelch has opened.
4) Microphone Muting
   In order to prevent inteference to the Digital signals transmitted when using the DCL system the microphone must be muted. This function is controlled by Auxilliary Microprocessor via pin P61.
5) Squelch Switch (SC)
   The Main Microprocessor provides a signal to control the Squelch threshold level during Digital Channel Linkage operations. Specifically this occurs when the radio is scanning for an open channel. When the SC terminal is a logic low, VR3 of the COMPOUND unit is used to control the Squelch Threshold.
6) RX Audio Muting (AL)
   The Main Micorprocessor provides a logic High on P32 to mute the receive audio during Code Squelch operation, Open Channel search operations, and Priority channel scanning.

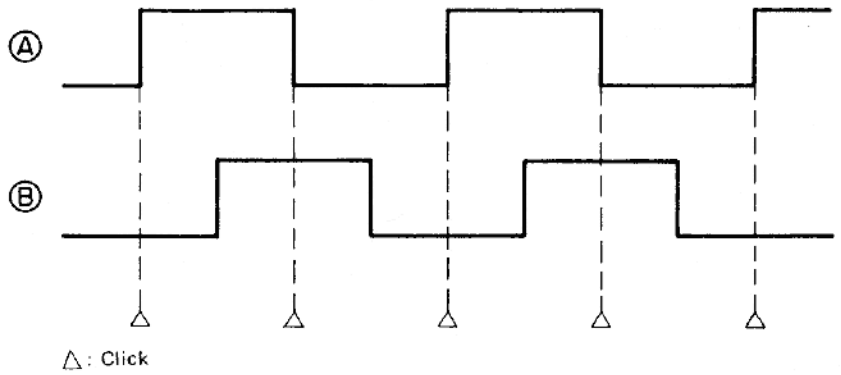


**Fig. 13 Encoder output waveforms**

# CIRCUIT DESCRIPTION

### Resetting the Microprocessor

To reset the Main Microprocessor (return to the default settings) ground pin number 49 of the Main Microprocessor. This should normally only be required when replacing the Lithium battery.

The Auxilliary microprocessor is reset by a reset pulse from IC7 : PST520D.

**NOTE 2 :** The operating system of this radio is in NON-ERASEABLE memory in the microprocessors. Replacing/removing the battery will not require reprogramming of Operating System paramaters. Operator programmed information (telephone numbers, memory frequencies, etc.) will require reentry.

### Memory backup

Transistor Q2 : 2SC2458(Y) and zener diode D3 : MTZ7.5JA sense when the voltage supplied to the DC power connector drops below approximately 7.5 Vdc from its normal 13.8 Vdc. If the supply voltage falls below this minimum a control signal is supplied to the HOLD terminal (pin 52) of the Main Microprocessor via a Schmitt trigger. The microprocessor then enters the backup mode and draws power from the Lithium battery.

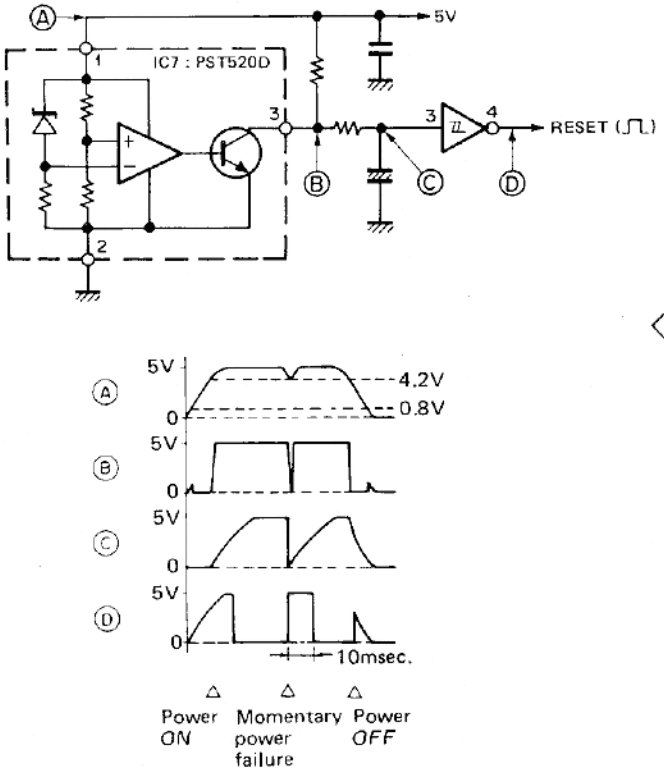


**Fig. 14 Reset circuit and waveforms at respective points**

### DCL Contro System

A block diagram of the DCL control system is shown in Fig. 15.

Control of Open Channel searching is performed by the Main Microprocessor. The microprocessor searches for an open channel by controlling the frequency of the receiver section. When an open channel is found the frequency data of that channel is stored into RAM and a control signal is applied to the Auxilliary microprocessor. The Auxilliary microprocessor takes this signal, reads the frequency data that was stored in the RAM, generates the Digital Control signal, and applies this data to the MODEM unit (X57-1140-20). The MODEM unit uses this incoming data to generate the MSK (Minimum Shift Keying) signal which is applied to the COMPOUND unit for transmission.

A portion of the incoming receive signal is applied to the RD terminal of the MODEM unit. The MODEM unit detects the prescence of any Digital Control signal and if present relays it to the Auxilliary Microprocessor.

The Auxilliary microprocessor compares the incoming DCL signal with the preprogrammed DCL data maintained in memory. If the signals are equal a request is made to transfer the incoming data into RAM. The Main microprocessor detects this transfer request and passes the data into RAM, and transmits a signal signifying data has been received, is sounds an audible alarm.

The Main microprocessor performs any frequency shifts or code squelch functions, determined by the incoming data.

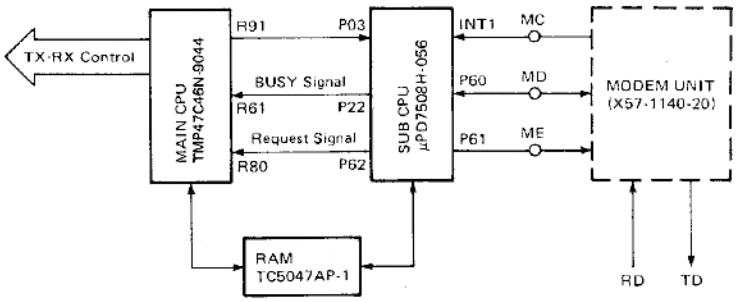


**Fig. 15 DCL control system block diagram**

# CIRCUIT DESCRIPTION

| Pin No. | Name | In/Out | Function | Logic | Pin No. | Name | In/Out | Function | Logic |
|---|---|---|---|---|---|---|---|---|---|
| 1 | RD0 | I | Encoder E1 | | 33 | P20 | | | |
| 2 | RD1 | I | Encoder E2 | | 34 | P21 | O | PLL Enable Signal | |
| 3 | R40 | I/O | Data Bus (D0) | | 35 | P22 | O | HD61602 $\overline{RE}$ Signal | |
| 4 | R41 | I/O | Data Bus (D1) | | 36 | P23 | O | HD61602 $\overline{WR}$ Signal | |
| 5 | R42 | I/O | Data Bus (D2) | | 37 | P30 | O | PLL (Tone) Data Output | |
| 6 | R43 | I/O | Data Bus (D3) | | 38 | P31 | O | Squelch Control Signal | |
| 7 | R50 | I/O | Data Bus (D4) | | 39 | P32 | O | Audio Mute Signal | |
| 8 | R51 | I/O | Data Bus (D5) | | 40 | P33 | O | PLL (Tone) Clock Output | |
| 9 | R52 | I/O | Data Bus (D6) | | 41 | RB0 | I | VOICE SW Input | |
| 10 | R53 | I/O | Data Bus (D7) | | 42 | RB1 | I | PHONE SW input | |
| 11 | R60 | I | HD61602 READY Signal | | | | | | |
| 12 | R61 | I | SUB CPU Busy Signal | | 43 | RB2 | I | MIC Down SW Input | |
| 13 | R62 | I | Busy Signal | | 44 | RB3 | I | MIC Up SW Input | |
| 14 | R63 | I | Tone SW Input | | 45 | K00 | I | SW Return (S1) | |
| 15 | R70 | I | 16 Key Return (K1) | | 46 | K01 | I | SW Return (S2) | |
| 16 | R71 | I | 16 Key Return (K2) | | 47 | K02 | I | SW Return (S3) | |
| 17 | R72 | I | 16 Key Return (K3) | | 48 | K03 | I | SW Return (S4) | |
| 18 | R73 | I | 16 Key Return (K4) | | 49 | $\overline{RESET}$ | | Reset Input | |
| 19 | RA0 | O | Memory Lamp | | 50 | Xin | | Clock | |
| 20 | RA1 | O | RAM OD Signal Output | | 51 | Xout | | Clock | |
| 21 | RA2 | O | Standby Signal Output | | 52 | $\overline{HOLD}$ | | Back up Information Input | |
| 22 | RA3 | O | RAM A8 Signal Output | | 53 | R80 | I | SUB CPU Request Signal | |
| 23 | P00 | O | Address Latch | | 54 | R81 | I | PTT SW Input | |
| 24 | P01 | O | RAM $\overline{CE1}$ Signal Output | | 55 | R82 | I | DCL Diode Matrix Input | |
| 25 | P02 | O | HD61602 $\overline{CS}$ Signal Output | | 56 | R83 | I | SCAN Timer Trigger pulse | |
| 26 | P03 | O | RAM CE2 Signal Output | | 57 | R90 | O | Keyboard select | |
| 27 | P10 | O | 16 Key Scan (K5) | | 58 | R91 | O | Serial Data Output | |
| 28 | P11 | O | 16 Key Scan (K6) | | 59 | R92 | O | Serial Clock Output | |
| 29 | P12 | O | 16 Key Scan (K7) | | 60 | RC0 | O | LED (DCL) Control | |
| 30 | P13 | O | 16 Key Scan (K8) | | 61 | RC1 | O | LED (C.SQ) Control | |
| 31 | TEST | | GND | | 62 | RC2 | O | SW Scan | |
| 32 | Vss | | GND | | 63 | RC3 | O | Tone DATA LOAD Signal | |
| | | | | | 64 | VDD | | Power Supply | |

**Table 5 TMP47C46N-9044 Terminal functions (Control unit IC2)**

| Pin No. | Name | In/Out | Function | Logic | Pin No. | Name | In/Out | Function | Logic |
|---|---|---|---|---|---|---|---|---|---|
| 1 | 0OUT | | Open | | 21 | CL2 | | Clock | |
| 2 | P20 | O | VS-1 PS4 | | 22 | INT1 | I | Modem Clock Input | |
| 3 | P21 | O | "Beeper" Switching | | 23 | P00 | I | Backup Clock Input | |
| 4 | P22 | O | MAIN CPU Busy Signal | | 24 | P01 | I | Serial Clock Input | |
| 5 | P23 | O | VS-1 SR | | 25 | P02 | | Open | |
| 6 | P10 | O | Adress Latch | | 26 | P03 | I | Serial Data Input | |
| 7 | P11 | | | | 27 | P60 | I/O | Modem Data Input/Output | |
| 8 | P12 | I | HD61602 READY Signal | | 28 | P61 | O | Modem Me Signal Output | |
| 9 | P13 | O | VS-1 BY | | 29 | P62 | O | MAIN CPU Request Signal | |
| 10 | P30 | O | VS-1 PSO | | 30 | P63 | O | RAM A8 Signal Output | |
| 11 | P31 | O | VS-1 PS1 | | 31 | P50 | I/O | DATA BUS (D0) | |
| 12 | P32 | O | VS-1 PS2 | | 32 | P51 | I/O | DATA BUS (D1) | |
| 13 | P33 | O | VS-1 PS3 | | 33 | P52 | I/O | DATA BUS (D2) | |
| 14 | P70 | O | RAM OD Signal Output | | 34 | P53 | I/O | DATA BUS (D3) | |
| 15 | P71 | O | HD61602 $\overline{CS}$ Signal Output | | 35 | P40 | I/O | DATA BUS (D4) | |
| 16 | P72 | O | RAM and HD61602 R/W | | 36 | P41 | I/O | DATA BUS (D5) | |
| 17 | P73 | O | RAM $\overline{CS1}$ Signal Output | | 37 | P42 | I/O | DATA BUS (D6) | |
| 18 | RESET | | Reset Input | | 38 | P43 | I/O | DATA BUS (D7) | |
| 19 | CL1 | | Clock | | 39 | Vss | | GND | |
| 20 | VDD | | Power Supply | | 40 | EVENT | | GND | |

**Table 6 μPD7508H-056 Terminal functions (Control unit IC3)**

# CIRCUIT DESCRIPTION

## TONE unit (X52-1330-20)

Incoming serial data from the Control unit is converted to parallel data by IC2 : MB88306. Serial data on the DT line, and the serial clock is on the CT line. When the ET terminal is high data is transferred, the tone output can be disabled by setting D1 to logic low. This can also be done by switching the ME terminal high.
IC1 : S7116A prevents the tone generator from oscillating outside the specified limits.

## MODEM unit (X57-1140-20)

The modem Q3 : μPD65003C-20 uses a clock frequency of 3.6864MHz that is supplied across pins 18 and 19. Pin 13 is used to select transmit or receive operation of the modem. Transmit is selected when pin 13 is high, and receive when it is low. Pin 12 supplies the modem clock (1200Hz) to the MC terminal for transmit and receive clock timing purposes. Data transfers are based on this clock timing. When the transmit mode has been selected data is transferred to pins 1 thru 5 to produce the 1200 or 1800Hz MSK signal. This signal is then digital to analog converted by a ladder resistor network and applied to the TD terminal.
When the MODEM unit is in the receive mode it processes the signal applied to pin 9. This digitized Audio Frequency signal is received from the RD terminal after passing thru a band-pass filter and comparator circuit. This signal is converted by the MODEM unit and transferred thru pin 7, shaped by the LPF and comparator and applied again to pin 8.
The receive data and clock signal that are generated by the modem are based on the data applied to pins 12 and 14.

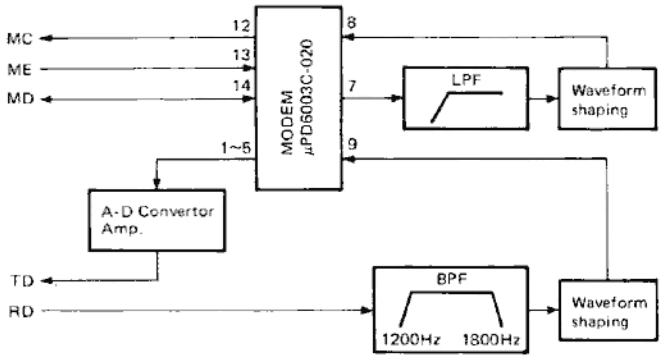


Fig. 16 MODEM unit (X57-1140-20) block diagram

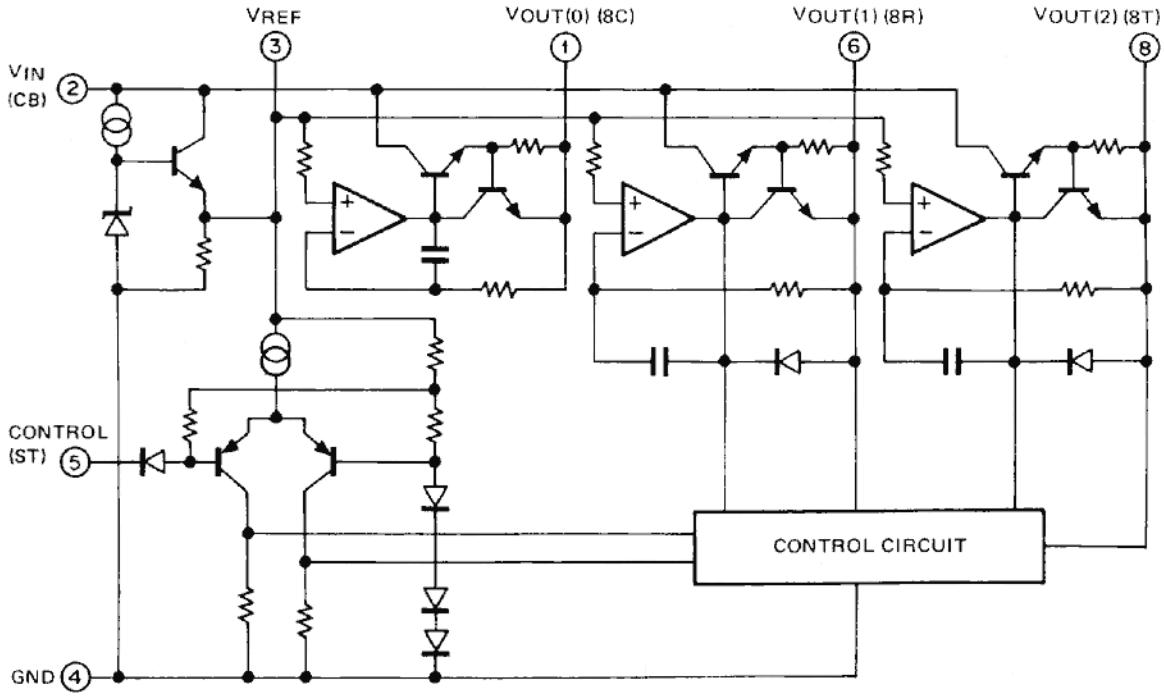


Fig. 17 MB3756 Equivalent circuit (COMP unit IC3)

# CIRCUIT DESCRIPTION

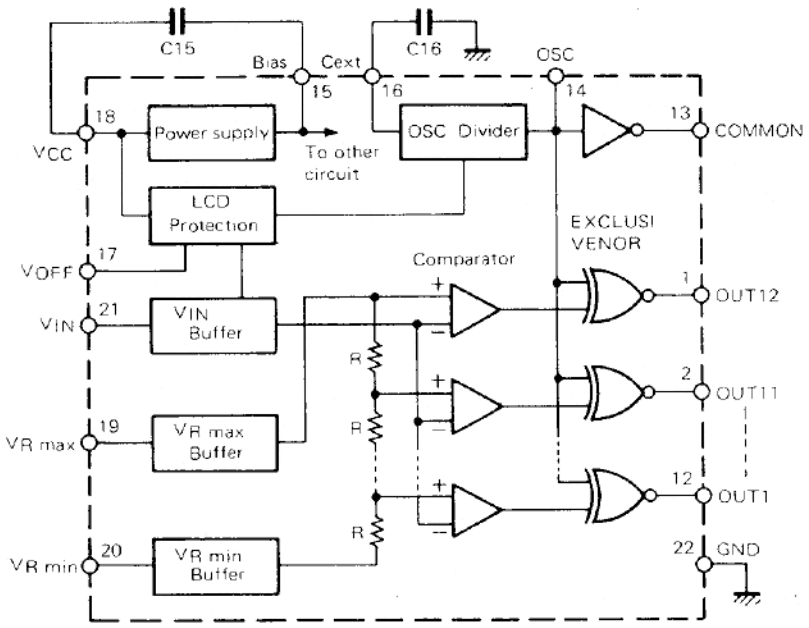


Fig. 18 IR2429 Block diagram (Display unit IC1)

| Pin No. | Pin Name | I/O | Pull U/D | Part Name | Pin No. | Pin Name | I/O | Pull U/D | Remarks |
|---|---|---|---|---|---|---|---|---|---|
| 3 | S10 | O | – | LCD | | 10 | | | Level meter segment output |
| 5 | S8 | | | | | 8 | | | |
| 7 | S6 | | | | | 6 | | | |
| 8 | S5 | | | | | 5 | | | |
| 9 | S4 | | | | | 4 | | | |
| 10 | S3 | | | | | 3 | | | |
| 11 | S2 | | | | | 2 | | | |
| 12 | S1 | | | | | 1 | | | |
| 15 | BIAS | I | – | | | | | | Prevents C12 oscillation |
| 16 | C | | – | GND | | | | | External clock is used; C is grounded. |
| 18 | VCC | | – | Connector J6 | | 8C2 | I | | 8V power supply |
| 19 | VREF–MAX | | | | | | | | Determines level 10 voltage value |
| 20 | VREF–MIN | | | GND | | | I | | Determines level 1 voltage value. |
| 21 | VIN | | D R21 | Connector J6 | | M | I | | Meter input (DC) |
| 22 | GND | – | – | GND | | | | | GND pin |

Note: Pins not specified must remain open.

Table 7 IR2429 Terminal functions

# PARTS LIST

**CAPACITORS** CC 45 TH 1H 220 J
1 2 3 4 5 6

1 = Type ..... ceramic, electrolyic, etc.
2 = Shape .....round, square, etc.
3 = Temp. coefficient
4 = Voltage rating
5 = Value
6 = Tolerance

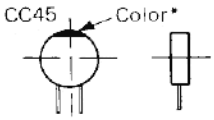


- **Capacitor value**

0 1 0 = 1pF
1 0 0 = 10pF
1 0 1 = 100pF
1 0 2 = 1000pF = 0.001μF
1 0 3 = 0.01μF

2 2 0 = 22pF
1st number | Multiplier
2nd number

- **Temperature Coefficient**

| 1st Word | C | L | P | R | S | T | U |
|---|---|---|---|---|---|---|---|
| Color* | Black | Red | Orange | Yellow | Green | Blue | Violet |
| ppm/°C | 0 | −80 | −150 | −220 | −330 | −470 | −750 |

| 2nd Word | G | H | J | K | L |
|---|---|---|---|---|---|
| ppm/°C | ± 30 | ± 60 | ± 120 | ± 250 | ± 500 |

Example CC45TH = −470±60 ppm/°C

- **Tolerance**

| Code | C | D | G | J | K | M | X | Z | P | No code | |
|---|---|---|---|---|---|---|---|---|---|---|---|
| (%) | ± 0.25 | ± 0.5 | ± 2 | ± 5 | ± 10 | ± 20 | + 40<br>−20 | + 80<br>−20 | + 100<br>−0 | More than<br>Less than | 10μF−10~+50<br>4.7μF−10~+75 |

Less than 10 pF

| Code | B | C | D | F | G |
|---|---|---|---|---|---|
| (pF) | ± 0.1 | ± 0.25 | ± 0.5 | ± 1 | ± 2 |

- **Rating voltage**

| 1st word \ 2nd word | A | B | C | D | E | F | G | H | J | K | V |
|---|---|---|---|---|---|---|---|---|---|---|---|
| 0 | 1.0 | 1.25 | 1.6 | 2.0 | 2.5 | 3.15 | 4.0 | 5.0 | 6.3 | 8.0 | – |
| 1 | 10 | 12.5 | 16 | 20 | 25 | 31.5 | 40 | 50 | 63 | 80 | 35 |
| 2 | 100 | 125 | 160 | 200 | 250 | 315 | 400 | 500 | 630 | 800 | – |
| 3 | 1000 | 1250 | 1600 | 2000 | 2500 | 3150 | 4000 | 5000 | 6300 | 8000 | – |

- **Chip capacitors**

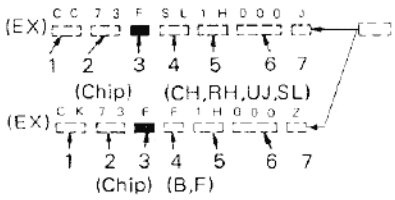


- **Chip resistor (Carbon)**

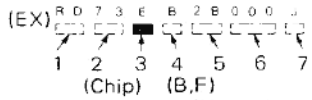


- **Carbon resistor (Normal type)**

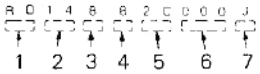


1 = Type ..... ceramic, electrolytic, etc.
2 = Shape ..... round, square, etc.
3 = Dimension
4 = Temp. coefficient
5 = Voltage rating
6 = Value
7 = Tolerance.

**Dimension**

| Dimension code | L | W | T |
|---|---|---|---|
| Empty | 5.6 ± 0.5 | 5.0 ± 0.5 | Less than 2.0 |
| E | 3.2 ± 0.2 | 1.6 ± 0.2 | Less than 1.25 |
| F | 2.0 ± 0.3 | 1.25 ± 0.2 | Less than 1.25 |

**Dimension**

| Dimension code | L | W | T | Wattage |
|---|---|---|---|---|
| E | 3.2 ± 0.2 | 1.6 ± 0.2 | 0.57 | 2B |
| F | 2.0 ± 0.3 | 1.25 ± 0.2 | 0.45 | 2A |

**Rating wattage**

| Cord | Wattage | Cord | Wattage | Cord | Wattage |
|---|---|---|---|---|---|
| 2A | 1 10W | 2E | 1 4W | 3A | 1W |
| 2B | 1 8W | 2H | 1 2W | 3D | 2W |
| 2C | 1 6W | | | | |

Dimension

# PARTS LIST

## SEMICONDUCTOR

N : New parts
* : Please note that parts are sometimes not in stock and it takes much time to deliver.

| Item | Remarks | Part No. |
|---|---|---|
| **Diode** | | 1N60 |
| | | 1N60A |
| | | 1N4448 |
| | | 1S1555 |
| | | 1S1587 |
| | | 1S2208 |
| | | 1SS106 |
| | | 1SS133 |
| | | MA856 |
| | | MC911 |
| | | MC921 |
| | | MI308 |
| | | MI407 |
| | | U15B |
| **Chip diode** | N | 1SS181 |
| | N | 1SS184 |
| **Vari-cap** | | 1SV50 |
| **Zener diode** | | MTZ5.6JC |
| | | MTZ6.2JA |
| | | MTZ7.5JA |
| | | MTZ11JC |
| **LED** | N | LN38GPL |
| | | LN222RP |
| | | LN322GP |
| | | LN442YP |
| | N | U19DD306 |
| **LCD** | N | FSS8066 |
| **Thermister** | | 112-502-2 |
| **TR** | N | 2SA790(A) |
| | | 2SA1015(Y) |
| | | 2SA1048(Y) |
| | | 2SC496(Y) |
| | | 2SC1775(E) |
| | | 2SC2347 |
| | | 2SC2458(Y) |
| | | 2SC2487(L) |
| | | 2SC2668(Y) |
| | | 2SC2407(I) |
| | | 2SD1406(Y) |
| **Chip TR** | | 2SC2712(BL) |
| | | 2SC2712(K) |
| | | 2SC2712(Y) |
| | | 2SC2714(Y) |
| **Digital TR** | | 2SC3295(B) |
| | | DTA114YF |
| | | DTC114ES |
| | | DTC124EF |
| | | DTC143TS |
| | N | UN2213 |
| **FET** | | 2SK30A(O) |
| | | 2SK125 |
| | | 3SK74(L) |
| | | 3SK129(S) |
| **Power module** | | M57774 |
| **IC** | N | HD61602 |
| | | IR2429 |
| | | LR4087 |
| | | MB3756 |
| | | MC14584BCP |
| | | MC145151P*J |
| | | MC145155P*K |
| | | NE555P |
| | | NJM78M06A |
| | | NJM4558M |
| | | PST520D |
| | N | TA7761P |
| | | TC40H374P |
| | | TC5047AP-1 |
| | | TMP47C46N-9042 |
| | N | μPC1241H |
| | | μPD7508HC-056 |

| | TM-3530A |
|---|---|
| FINAL UNIT | X45-1460-10 |
| PLL UNIT | X50-2040-10 |
| CONTROL UNIT | X53-1440-11 |
| DISPLAY UNIT | X54-1860-11 |
| COMPOUND UNIT | X60-1290-10 |

# PARTS LIST

* New Parts
Parts without Parts No. are not supplied.
Les articles non mentionnes dans le Parts No. ne sont pas fournis.
Teile ohne Parts No. werden nicht geliefert.

| Ref. No. 参照番号 | Address 位置 | New Parts 新 | Parts No. 部品番号 | Description 部品名／規格 | Destination 仕向 | Remarks 備考 |
|---|---|---|---|---|---|---|
| | | | | **TM-3530A GENERAL** | | |
| 1 | 2F,1G | | A01-0996-02 | METALLIC CABINET(TOP) | | |
| 2 | 3G | | A01-0997-12 | METALLIC CABINET(BOTTOM) | | |
| 3 | 2B,3F | * | A20-2580-03 | PANEL ASSY | | |
| 4 | 2A | | A21-0791-04 | DRESSING PANEL (KEY BOARD) | | |
| 5 | 2A | | A21-0795-04 | DRESSING PANEL (DCL) | | |
| - | | | A13-0666-12 | MOUNTING BRACKET ASSY(R) | | |
| - | | | A13-0667-12 | MOUNTING BRACKET ASSY(L) | | |
| - | | | A13-0668-04 | MOUNTING HARDWARE | | |
| 10 | 2G,2F | | B01-0655-13 | SIDE ESCUTCHEON | | |
| 11 | 1F | | B04-0411-04 | SP METAL | | |
| 12 | 1F | | B05-0708-04 | SLP SARAN NET | | |
| 13 | 2F | * | B10-0679-04 | FRONT GLASS | | |
| 14 | 3G | * | B40-3658-04 | MODEL NAME PLATE | | |
| 15 | 2A | * | B43-1076-04 | BADGE | | |
| - | | | B11-0429-04 | LIGHT GUIDING PLATE(AL) | | |
| - | | | B11-0431-04 | LIGHT GUIDING PLATE(P.MR) | | |
| - | | | B11-0432-04 | LIGHT GUIDING PLATE(PHONE) | | |
| - | | | B11-0433-04 | LIGHT GUIDING PLATE(MAIN) | | |
| - | | | B11-0434-04 | REFLECTION GLASS(ON AIR/F.LOCK | | |
| - | | | B11-0436-04 | REFLECTION GLASS(DCS,CSQ) | | |
| - | | | B46-0410-00 | WARRANTY CARD | K | |
| - | | * | B50-8072-00 | INSTRUCTION MANUAL | | |
| - | | | E07-0852-05 | BP METAL SOCKET | | |
| - | | | E30-2022-15 | DC CORD ASSY (ACSY) | | |
| 20 | 2G | | F10-1206-04 | GROUNDING SPRING | | |
| 21 | 1C | | F15-0649-04 | SHEET (KEYBOARD PCB) | | |
| - | | | F05-8021-05 | FUSE (8A) ACSY | | |
| - | | | F20-0521-04 | INSULATE PLATE(B) LITHIUM BTRY | | |
| 26 | 1A,2B | | G01-0818-04 | COMPRESSION SPRING (KNOB) | | |
| 27 | 3F | | G02-0505-05 | KNOB FITTING SPRING(AF/SQ) | | |
| 28 | 1C | | G10-0642-04 | SHADE CLOTH | | |
| - | | | G11-0616-04 | SHADE SHEET (F.LOCK) | | |
| - | | | G13-0823-04 | CUSHION(MOUNTING BRACKET ACSY) | | |
| - | | * | H01-8014-03 | ITEM CARTON BOX(INSIDE) | | |
| - | | | H10-2501-03 | POLYSTYRENE FOAMED FIXTURE | | |
| - | | | H10-2609-12 | POLYSTYRENE FOAMED FIXTURE | | |
| - | | | H25-0029-04 | PROTECTION BAG (SCREW,NUT ETC) | | |
| - | | | H25-0103-04 | PROTECTION BAG (MIC,MNT BRKT) | | |
| - | | | H25-0106-04 | PROTECTION BAG | | |
| - | | | H25-0116-04 | PROTECTION BAG (ACSY) | | |
| - | | | H25-0117-04 | PROTECTION BAG (DC CORD) | | |
| 33 | 1F | | J21-1144-34 | SP MOUNTING HARDWARE (KEY IPC) | | |
| 34 | 1C | | J21-4182-14 | MOUNTING HARDWARE | | |
| 35 | 1B,2B | | J29-0409-04 | SW KNOBS GUIDE (KNOB) | | |
| - | | | J02-0439-05 | FOOT (ACSY) | | |
| - | | | J19-1346-04 | MIC HOOK (ACSY) | | |
| - | | | J42-0449-05 | BUSHING (PANEL) | | |
| - | | | J61-0408-05 | WIRE BAND | | |
| 40 | 3F | | K21-0779-15 | KNOB (MAIN) | | |
| 41 | 3F | | K23-0779-04 | KNOB (VOLUME) | | |
| 42 | 2A | | K29-3039-05 | KNOB ASSY (TACT) | | |

# PARTS LIST

* New Parts
Parts without **Parts No.** are not supplied.
Les articles non mentionnes dans le **Parts No.** ne sont pas fournis.
Teile ohne **Parts No.** werden nicht gellefert.

| Ref. No. 参照番号 | Address 位置 | New Parts 新 | Parts No. 部品番号 | Description 部品名／規格 | Destination 仕向 | Remarks 備考 |
|---|---|---|---|---|---|---|
| 43 | 2A | | K29-3044-05 | KNOB ASSY (PUSH) | | |
| 45 | 2B | | N29-0301-04 | STOPPER RING (TACT KNOB) | | |
| - | | | N09-0008-04 | HEX HEAD SCREW (ACSY) | | |
| - | | | N09-0632-05 | TAPPING SCREW (ACSY) | | |
| - | | | N09-0700-04 | STEPPED SCREW (FOR PANEL) | | |
| - | | | N14-0510-04 | FLANGE NUT (ACSY) | | |
| - | | | N14-0526-14 | NUT (VOL) | | |
| - | | | N15-1040-45 | FLAT WASHER (ACSY MNT BRKT) | | |
| - | | | N15-1060-46 | FLAT WASHER (ACSY) | | |
| - | | | N16-0060-46 | SPRING WASHER (ACSY) | | |
| - | | | N32-3006-41 | FLAT HEAD SCREW(CHASSIS) | | |
| - | | | N33-3006-45 | OVAL HEAD SCREW(SPEAKER) | | |
| - | | | N35-2004-41 | BINDING HEAD SCREW(DISPLAY) | | |
| - | | | N35-2604-41 | BINDING HEAD SCREW | | |
| - | | | N87-2605-41 | BRAZIER HEAD SCREW | | |
| - | | | N87-3006-41 | BRAZIER HEAD SCREW(GND,SPRING) | | |
| - | | | N87-4008-41 | BRAZIER HEAD SCREW(MIC HOOK) | | |
| - | | | N89-3006-45 | BINDING HEAD SCREW | | |
| - | | | N99-0304-04 | SCREW WITH HEX HOLE(MNT BRKT) | | |
| - | | | S50-1406-05 | TACT SW FOR MICROPHONE(UP/DOWN | | |
| 48 | 1F | | T07-0241-05 | LOUDSPEAKER(FULLRANGE) | | |
| - | | | T91-0357-05 | MICROPHONE (ACSY) | | |
| 50 | 1C | | W02-0371-05 | ROTAEY ENCODER | | |
| - | | | W01-0401-05 | HEX WRENCH (ACSY) | | |
| - | | | W09-0326-05 | LITHIUM BATTERY(BR2032) | | |
| 55 | 2D,2G | * | X45-1460-10 | FINAL UNIT | | |
| 56 | 2G | * | X50-2040-10 | PLL UNIT | | |
| 57 | 3F | * | X53-1440-11 | CONTROL UNIT | | |
| 58 | 1B,1C | * | X54-1860-11 | DISPLAY UNIT | | |
| 59 | 2G | * | X60-1290-10 | COMPOUND UNIT | | |
| **FINAL (X45-1460-10)** | | | | | | |
| C1 | | | CC45SL2H050C | CERAMIC 5.0PF C | | |
| C2 | | | CC45SL2H060D | CERAMIC 6.0PF D | | |
| C3 | | | CC45SL2H040C | CERAMIC 4.0PF C | | |
| C4 | | | CK45B2H102K | CERAMIC 1000PF K | | |
| C5 | | | CC45SL2H150J | CERAMIC 15PF J | | |
| C6 | | | CC45CH2H010C | CERAMIC 1.0PF C | | |
| C7 -9 | | | CC45SL2H150J | CERAMIC 15PF J | | |
| C11 ,12 | | | CC45SL2H030C | CERAMIC 3.0PF C | | |
| C13 | | | C90-2038-05 | ELECTRO 22UF 16WV | | |
| C14 | | | CK45B1H102K | CERAMIC 1000PF K | | |
| C15 | | | C90-2038-05 | ELECTRO 22UF 16WV | | |
| C16 -19 | | | CK45B1H102K | CERAMIC 1000PF K | | |
| C21 -25 | | | CK45B1H102K | CERAMIC 1000PF K | | |
| C26 | | | CS15E1C3R3M | TANTAL 3.3UF 16WV | | |
| C27 | | | C91-0667-05 | CERAMIC 0.0047UF K | | |
| C28 | | | CK45B1H102K | CERAMIC 1000PF K | | |
| C29 | | | C91-0667-05 | CERAMIC 0.0047UF K | | |
| C30 -34 | | | CK45B1H102K | CERAMIC 1000PF K | | |
| 100 | 1D | | E04-0161-05 | RF COAXIAL CABLE RECEPTACLE | M | |
| 101 | 2D | | E11-0401-05 | PHONE JACK | | |
| 102 | 1D | | E30-2021-35 | DC CORD | | |

# PARTS LIST

* New Parts
Parts without **Parts No.** are not supplied.
Les articles non mentionnes dans le **Parts No.** ne sont pas fournis.
Teile ohne **Parts No.** werden nicht gellefert.

| Ref. No. 参照番号 | Address 位置 | New Parts 新 | Parts No. 部品番号 | Description 部品名／規格 | Destination 仕向 | Remarks 備考 |
|---|---|---|---|---|---|---|
| - | | | E31-2109-05 | CONNECTING WIRE | | |
| 105 | 1D,1G | | F01-0935-15 | HEAT SINK | | |
| 106 | 1D | | F05-8021-05 | FUSE (8A) | | |
| - | | | J61-0408-05 | WIRE BAND | | |
| L1 | | | L34-1018-05 | COIL | | |
| L2 | | | L34-0908-05 | COIL (ø3,3.5T) | | |
| L3 | | | L34-0894-05 | COIL | | |
| L4 | | | L34-0499-05 | COIL | | |
| L5 | | | L34-0908-05 | COIL (ø3,3.5T) | | |
| L6 | | | L34-0499-05 | COIL | | |
| L7 | | | L34-1038-05 | COIL | | |
| L8 ,9 | | | L40-1092-14 | SMALL FIXED INDUCTOR (1UH) | | |
| N | 2E,3E | | N09-0626-04 | SCREW (SEMUS) | | |
| P | 2E | | N09-0623-04 | SCREW (SEMUS) | | |
| - | | | R92-0150-05 | JUMPER REST 0 OHM | | |
| R2 | | | RD14DB2H181J | SMALL-RD 180 J 1/2W | | |
| VR1 | | | R12-0434-05 | TRIMMING POT. (100) | | |
| VR2 | | | R12-4417-05 | TRIMMING POT. (50K) | | |
| VR3 | | | R12-3455-05 | TRIMMING POT. (10K) | | |
| VR4 | | | R12-4417-05 | TRIMMING POT. (50K) | | |
| D1 | | | U15B | DIODE | | |
| D2 | | | MI407 | DIODE | | |
| D3 | | | MI308 | DIODE | | |
| D4 ,5 | | | 1S1587 | DIODE | | |
| Q1 | | | M57774 | POWER MODULE | | |
| Q2 | | | 2SD1406(Y) | TRANSISTOR | | |
| Q3 | | | 2SA1015(Y) | TRANSISTOR | | |
| Q4 -7 | | | 2SC2458(Y) | TRANSISTOR | | |
| **PLL (X50-2040-10)** | | | | | | |
| C1 | | | C91-0117-05 | CERAMIC 0.01UF K | | |
| C2 | | | CS15E1VR47M | TANTAL 0.47UF 35WV | | |
| C4 | | | CF92V1H683J | MF 0.068UF J | | |
| C5 | | | C91-1008-05 | CERAMIC 0.022UF K | | |
| C6 ,7 | | | CS15E1C2R2M | TANTAL 2.2UF 16WV | | |
| C8 | | | CQ92M1H393K | MYLAR 0.039UF K | | |
| C9 ,10 | | | CS15E1E010M | TANTAL 1.0UF 25WV | | |
| C11 | | | CK45B1H102K | CERAMIC 1000PF K | | |
| C12 | | | CC45CH1H060D | CERAMIC 6.0PF D | | |
| C13 | | | CC45CH1H0R5C | CERAMIC 0.5PF C | | |
| C14 | | | CC45UJ1H040C | CERAMIC 4.0PF C | | |
| C15 | | | CC45CH1H060D | CERAMIC 6.0PF D | | |
| C17 | | | CC45CH1H1R5C | CERAMIC 1.5PF C | | |
| C18 | | | C91-0117-05 | CERAMIC 0.01UF K | | |
| C19 | | | CE04W1A470M | ELECTRO 47UF 10WV | | |
| C20 | | | CC45CH1H020C | CERAMIC 2.0PF C | | |
| C21 | | | CC45CH1H020C | CERAMIC 2.0PF C | | |
| C22 | | | CK45B1H102K | CERAMIC 1000PF K | | |
| C23 | | | CE04W1A470M | ELECTRO 47UF 10WV | | |
| C24 | | | CC45CH1H470J | CERAMIC 47PF J | | |
| C25 | | | CK45B1H102K | CERAMIC 1000PF K | | |
| C26 | | | CE04W1A470M | ELECTRO 47UF 10WV | | |

# PARTS LIST

⁎ New Parts
Parts without **Parts No.** are not supplied.
Les articles non mentionnes dans le **Parts No.** ne sont pas fournis.
Telle ohne **Parts No.** werden nicht gellefert.

| Ref. No. 参照番号 | Address 位置 | New Parts 新 | Parts No. 部品番号 | Description 部品名／規格 | | | Destination 仕向 | Remarks 備考 |
|---|---|---|---|---|---|---|---|---|
| C27 | | | C91-0117-05 | CERAMIC | 0.01UF | K | | |
| C28 ,29 | | | CK45B1H102K | CERAMIC | 1000PF | K | | |
| C30 | | | C91-0117-05 | CERAMIC | 0.01UF | K | | |
| C31 ,32 | | | CK45B1H102K | CERAMIC | 1000PF | K | | |
| C33 | | | C91-0117-05 | CERAMIC | 0.01UF | K | | |
| C35 | | | CE04W1C100M | ELECTRO | 10UF | 16WV | | |
| C36 | | | C91-0117-05 | CERAMIC | 0.01UF | K | | |
| C37 ,38 | | | CK45B1H102K | CERAMIC | 1000PF | K | | |
| C39 ,40 | | | C91-0117-05 | CERAMIC | 0.01UF | K | | |
| C41 | | | CE04W1H4R7M | ELECTRO | 4.7UF | 50WV | | |
| C42 | | | C91-0667-05 | CERAMIC | 0.0047UF | K | | |
| C43 | | | CK45B1H102K | CERAMIC | 1000PF | K | | |
| C44 | | | CC45CH1H050C | CERAMIC | 5.0PF | C | | |
| C46 | | | CC45CH1H020C | CERAMIC | 2.0PF | C | | |
| C47 | | | C91-0765-05 | CERAMIC | 0.0047UF | M | | |
| C50 | | | CQ92M1H223K | MYLAR | 0.022UF | K | | |
| C51 ,52 | | | CS15E1C2R2M | TANTAL | 2.2UF | 16WV | | |
| C53 | | | CE04W1A470M | ELECTRO | 47UF | 10WV | | |
| C54 | | | C91-0117-05 | CERAMIC | 0.01UF | K | | |
| C55 | | | CK45B1H102K | CERAMIC | 1000PF | K | | |
| C56 | | | CF92V1H683J | MF | 0.068UF | J | | |
| C57 | | | CE04W1A470M | ELECTRO | 47UF | 10WV | | |
| C58 | | | CK45B1H102K | CERAMIC | 1000PF | K | | |
| C60 ,61 | | | CC45CH1H090D | CERAMIC | 9.0PF | D | | |
| C62 | | | CC45CH1H060D | CERAMIC | 6.0PF | D | | |
| C63 | | | CE04W1A101M | ELECTRO | 100UF | 10WV | | |
| C64 | | | C91-0117-05 | CERAMIC | 0.01UF | K | | |
| C65 | | | CC45CH1H030C | CERAMIC | 3.0PF | C | | |
| C66 | | | CC45CH1H120J | CERAMIC | 12PF | J | | |
| C67 | | | CC45CH1H030C | CERAMIC | 3.0PF | C | | |
| C68 ,69 | | | CK45B1H102K | CERAMIC | 1000PF | K | | |
| C70 | | | CC45CH1H030C | CERAMIC | 3.0PF | C | | |
| C71 | | | CC45CH1H040C | CERAMIC | 4.0PF | C | | |
| C72 | | | CK45B1H102K | CERAMIC | 1000PF | K | | |
| C73 | | | CK45B1H471K | CERAMIC | 470PF | K | | |
| C74 | | | CS15E1E010M | TANTAL | 1.0UF | 25WV | | |
| C75 | | | C91-0757-05 | CERAMIC | 0.001UF | K | | |
| C77 | | | CE04W1A470M | ELECTRO | 47UF | 10WV | | |
| C78 ,79 | | | C91-0117-05 | CERAMIC | 0.01UF | K | | |
| C80 | | | CK45B1H221K | CERAMIC | 220PF | K | | |
| C81 ,82 | | | CC45CH1H180J | CERAMIC | 18PF | J | | |
| C83 | | | CK45B1H102K | CERAMIC | 1000PF | K | | |
| C84 | | | CC45CH1H040C | CERAMIC | 4.0PF | C | | |
| C85 | | | CC45CH1H0R5C | CERAMIC | 0.5PF | C | | |
| C86 | | | C91-0117-05 | CERAMIC | 0.01UF | K | | |
| C87 | | | CC45CH1H180J | CERAMIC | 18PF | J | | |
| C88 | | | CC45CH1H330J | CERAMIC | 33PF | J | | |
| C89 | | | CK45B1H102K | CERAMIC | 1000PF | K | | |
| C90 | | | C91-0757-05 | CERAMIC | 0.001UF | K | | |
| C91 | | | C91-0117-05 | CERAMIC | 0.01UF | K | | |
| C92 | | | CC45CH1H180J | CERAMIC | 18PF | J | | |
| C96 | | | CK45B1H102K | CERAMIC | 1000PF | K | | |
| C97 | | | C91-0117-05 | CERAMIC | 0.01UF | K | | |
| C99 | | | CC45CH1H080D | CERAMIC | 8.0PF | D | | |
| C100 | | | CC45SL1H101J | CERAMIC | 100PF | J | | |

# PARTS LIST

* New Parts
Parts without Parts No. are not supplied.
Les articles non mentionnes dans le Parts No. ne sont pas fournis.
Teile ohne Parts No. werden nicht geliefert.

| Ref. No. 参照番号 | Address 位置 | New Parts 新 | Parts No. 部品番号 | Description 部品名／規格 | Destination 仕向 | Remarks 備考 |
|---|---|---|---|---|---|---|
| C105 | | | C91-0745-05 | CERAMIC 100PF K | | |
| C108 | | | CC45CH1H470J | CERAMIC 47PF J | | |
| C109 | | | CC45CH1H1R5C | CERAMIC 1.5PF C | | |
| C110 | | | C91-0769-05 | CERAMIC 0.01UF M | | |
| C111 | | | CK45B1H102K | CERAMIC 1000PF K | | |
| C112 | | | CC45SL1H101J | CERAMIC 100PF J | | |
| C113 | | | CC45CH1H0R5C | CERAMIC 0.5PF C | | |
| C115 | | | C91-0117-05 | CERAMIC 0.01UF K | | |
| TC1 | | | C05-0308-05 | TRIMMING CAP (4P) | | |
| TC2 | | | C05-0031-15 | TRIMMING CAP (10P) | | |
| TC3 | | | C05-0030-15 | TRIMMING CAP (20P) | | |
| TC4 | | | C05-0308-05 | TRIMMING CAP (4P) | | |
| - | | | E04-0154-05 | RF COAXIAL CONNECTOR | | |
| - | | | E23-0512-05 | TERMINAL | | |
| - | | | E31-2170-15 | CONNECTING WIRE | | |
| - | | | E40-0273-05 | PIN CONNECTOR (2P) | | |
| - | | | E40-0573-05 | PIN CONNECTOR (5P) | | |
| - | | | E40-0673-05 | PIN CONNECTOR (6P) | | |
| L1 | | | L40-3391-03 | SMALL FIXED INDUCTOR (3.3UH) | | |
| L2 | | * | L32-0684-05 | OSCILLATING COIL (2.5T) | | |
| L3 | | | L40-1021-03 | SMALL FIXED INDUCTOR (1MH) | | |
| L4 | | | L34-0893-05 | COIL (4T) | | |
| L5 | | | L34-1023-05 | COIL (3T) | | |
| L6 | | | L34-0893-05 | COIL (4T) | | |
| L7 | | | L34-1023-05 | COIL (3T) | | |
| L8 | | | L40-2292-14 | SMALL FIXED INDUCTOR (2.2UH) | | |
| L10 | | * | L32-0684-05 | OSCILLATING COIL (2.5T) | | |
| L12 | | | L34-0895-05 | COIL | | |
| L13 | | | L40-3391-14 | SMALL FIXED INDUCTOR (3.3UH) | | |
| L14 ,15 | | | L34-2049-05 | COIL | | |
| L17 | | | L32-0681-05 | OSCILLATING COIL | | |
| L18 | | * | L77-1298-05 | CRYSTAL OSCILLATOR (46.55MHZ | | |
| L19 | | | L40-1001-14 | SMALL FIXED INDUCTOR (10UH) | | |
| L20 | | | L40-3382-14 | SMALL FIXED INDUCTOR (0.33UH) | | |
| L21 | | | L40-1092-14 | SMALL FIXED INDUCTOR (1UH) | | |
| C94 | | | R90-0600-05 | MULTI-COMP (100PX4) | | |
| R39 | | | RD14DB2H220J | SMALL-RD 22 J 1/2W | | |
| D1 | | | 1S1555 | DIODE | | |
| D2 ,3 | | | 1S2208 | DIODE | | |
| D4 | | | 1S1555 | DIODE | | |
| D5 | | | 1S2208 | DIODE | | |
| D6 | | | MTZ6.2JA | ZENER DIODE | | |
| IC1 | | * | MC145151P*J | IC(PARA INPUT PLL FREQ SYNTHE) | | |
| IC2 | | | MC14515SP*K | IC | | |
| Q1 | | | 2SC245B(Y) | TRANSISTOR | | |
| Q2 | | | 2SA104B(Y) | TRANSISTOR | | |
| Q3 -5 | | | 2SC1775(E) | TRANSISTOR | | |
| Q6 -7 | | | 2SC266B(Y) | TRANSISTOR | | |
| Q8 | | | 2SK125 | FET | | |
| Q9 | | | 2SC245B(Y) | TRANSISTOR | | |
| Q10 | | | 2SC266B(Y) | TRANSISTOR | | |
| Q11 | | | 2SC2347 | TRANSISTOR | | |

# PARTS LIST

* New Parts
Parts without Parts No. are not supplied.
Les articles non mentionnes dans le Parts No. ne sont pas fournis.
Telle ohne Parts No. werden nicht gellefert.

| Ref. No. 参照番号 | Address 位置 | New Parts 新 | Parts No. 部品番号 | Description 部品名／規格 | Destination 仕向 | Remarks 備考 |
|---|---|---|---|---|---|---|
| Q12 | | | 2SC2407(1) | TRANSISTOR | | |
| Q13 | | | 2SK30A(O) | FET | | |
| Q14 ,15 | | | 2SC2458(Y) | TRANSISTOR | | |
| Q16 | | | 2SK125 | FET | | |
| Q17 ,18 | | | 2SC2668(Y) | TRANSISTOR | | |
| Q19 | | | 2SC2787(L) | TRANSISTOR | | |
| Q20 -22 | | | 2SC2668(Y) | TRANSISTOR | | |
| **CONTROL (X53-1440-11)** | | | | | | |
| C1 | | | CK45B1H102K | CERAMIC 1000PF K | | |
| C2 | | | CE04CW1A330M | ELECTRO 33UF 10WV | | |
| C3 | | | CE04W1A101M | ELECTRO 100UF 10WV | | |
| C4 | | | C91-1008-05 | CERAMIC 0.022UF K | | |
| C5 | | | CE04W1A470M | ELECTRO 47UF 10WV | | |
| C7 | | | CK45B1H681K | CERAMIC 680PF K | | |
| C8 | | | CK45B1H102K | CERAMIC 1000PF K | | |
| C9 | | | CK45B1H182K | CERAMIC 1800PF K | | |
| C10 -16 | | | C91-1008-05 | CERAMIC 0.022UF K | | |
| C17 | | | CE04W1E3R3M | ELECTRO 3.3UF 25WV | | |
| C18 | | | CE04W1H010M | ELECTRO 1.0UF 50WV | | |
| C19 ,20 | | | C91-1008-05 | CERAMIC 0.022UF K | | |
| C23 ,24 | | | C91-1008-05 | CERAMIC 0.022UF K | | |
| C25 -28 | | | CK45B1H102K | CERAMIC 1000PF K | | |
| C29 -31 | | | C91-0745-05 | CERAMIC 100PF K | | |
| C66 | | | CS15E1A100M | TANTAL 10UF 10WV | | |
| - | | | E23-0465-05 | TERMINAL | | |
| - | | | E23-0512-05 | TERMINAL | | |
| - | | | E40-5016-05 | PIN CONNECTOR (2P) | | |
| - | | | E40-5017-05 | PIN CONNECTOR (3P) | | |
| - | | | E40-5018-05 | PIN CONNECTOR (4P) | | |
| - | | | E40-5019-05 | PIN CONNECTOR (5P) | | |
| - | | | E40-5021-05 | PIN CONNECTOR (7P) | | |
| - | | | E40-5022-05 | PIN CONNECTOR (8P) | | |
| - | | * | E40-5065-05 | PIN CONNECTOR (9P) | | |
| L1 | | | L78-0013-05 | RESONATOR (CST4.19MG) | | |
| L2 | | | L78-0012-05 | RESONATOR (CST3.58MG) | | |
| L3 | | | L78-0013-05 | RESONATOR (CST4.19MG) | | |
| R8 | | | R90-0202-05 | MULTI-COMP 47KX4 J 1/6W | | |
| R16 | | | R90-0286-05 | MULTI-COMP 4.7KX4 J 1/6W | | |
| R19 | | | R90-0233-05 | MULTI-COMP 10KX4 J 1/6W | | |
| R20 | | | R90-0281-05 | MULTI-COMP 10KX6 J 1/6W | | |
| R21 | | | R90-0291-05 | MULTI-COMP 100KX4 J 1/6W | | |
| R22 | | | R90-0595-05 | MULTI-COMP 10KX10 J | | |
| R35 | | | R90-0594-05 | MULTI-COMP 4.7KX11 J | | |
| VR1 | | | R12-7408-05 | TRIMMING POT. (500K) | | |
| D1 | | | MC911 | DIODE | | |
| D2 | | | 1N4448 | DIODE | | |
| D2 | | | 1S1555 | DIODE | | |
| D3 | | | MTZ7.5JA | ZENER DIODE | | |
| D4 -8 | | | 1N4448 | DIODE | | |
| D4 -8 | | | 1S1555 | DIODE | | |
| D11 | | | 1N4448 | DIODE | | |
| D11 | | | 1S1555 | DIODE | | |
| D13 -22 | | | 1N4448 | DIODE | | |

# PARTS LIST

* New Parts
Parts without **Parts No.** are not supplied.
Les articles non mentionnes dans le **Parts No.** ne sont pas fournis.
Teile ohne **Parts No.** werden nicht geliefert.

| Ref. No. 参照番号 | Address 位置 | New Parts 新 | Parts No. 部品番号 | Description 部品名／規格 | Destination 仕向 | Remarks 備考 |
|---|---|---|---|---|---|---|
| D13 -22 | | | 1S1555 | DIODE | | |
| D23 | | | MTZ5.6JC | ZENER DIODE | | |
| D24 | | | 1N4448 | DIODE | | |
| D24 | | | 1S1555 | DIODE | | |
| D25 ,26 | | | 1SS106 | DIODE | | |
| D27 ,28 | | | 1N4448 | DIODE | | |
| D27 ,28 | | | 1S1555 | DIODE | | |
| D29 | | | 1SS133 | DIODE | | |
| IC1 | | | MC14584BCP | IC | | |
| IC2 | | * | TMP47C46N-9044 | IC (CPU) | | |
| IC3 | | | UPD7508HC-056 | IC (CPU) | | |
| IC4 | | | LR4087 | IC | | |
| IC5 | | | TC40H374P | IC | | |
| IC6 | | | TC5047AP-1 | IC | | |
| IC7 | | | PST520D | IC(LOW POWER RESET) | | |
| Q1 | | | DTC124EF | DIGITAL TRANSISTOR | | |
| Q2 | | | 2SC2458(Y) | TRANSISTOR | | |
| Q3 ,4 | | | DTA114YF | DIGITAL TRANSISTOR | | |
| Q6 | | | DTC143TS | DIGITAL TRANSISTOR | | |
| **DISPLAY (X54-1860-11)** | | | | | | |
| C1 -7 | | | CK45B1H102K | CERAMIC 1000PF K | | |
| C8 | | | CE04CW1C4R7M | ELECTRO 4.7UF 16WV | | |
| C9 -11 | | | CK45B1H102K | CERAMIC 1000PF K | | |
| C12 -14 | | | CK73FB1H102K | CHIP C 1000PF K | | |
| C15 ,16 | | | C91-0117-05 | CERAMIC 0.01UF K | | |
| C17 ,18 | | | CK45B1H471K | CERAMIC 470PF K | | |
| C19 | | | CC45SL1H101J | CERAMIC 100PF J | | |
| 131 | 1B | | E06-0858-05 | 8P MIC CONNECTOR | | |
| - | | | J61-0408-05 | WIRE BAND | | |
| - | | | R92-0150-05 | JUMPER REST 0 OHM | | |
| VR1 | | | R05-3436-05 | POTENTIOMETER (10K) AF | | |
| VR2 | | | R05-4415-05 | POTENTIOMETER (50K) SQ | | |
| - | | | S59-0435-05 | KEY BOARD ASSY | | |
| S1 -3 | | | S40-2443-05 | PUSH SWITCH (LOCK) | | |
| S4 ,5 | | | S40-2444-05 | PUSH SWITCH (NON-LOCK) | | |
| S6 ,7 | | | S40-2443-05 | PUSH SWITCH (LOCK) | | |
| S8 | | | S40-2444-05 | PUSH SWITCH (NON-LOCK) | | |
| S9 -16 | | | S50-1426-05 | SENSITIVE SWITCH | | |
| - | | | FSS8066 | LCD (FOR KEY BOARD) | | |
| - | | | HD61602 | IC (FOR KEY BOARD) | | |
| D1 -5 | | | 1N4448 | DIODE | | |
| D1 -5 | | | 1S1555 | DIODE | | |
| D6 ,7 | | | MC921 | DIODE | | |
| D8 ,9 | | | 1N4448 | DIODE | | |
| D8 ,9 | | | 1S1555 | DIODE | | |
| D10 -13 | | | LN38GPL | LED | | |
| D14 | | | LN222RP | LED | | |
| D15 | | | LN322GP | LED | | |
| D16 ,17 | | | LN442YP | LED | | |
| IC1 | | | IR2429 | IC | | |
| Q1 | | | DTC124EF | DIGITAL TRANSISTOR | | |
| Q2 | | | 2SA790(A,B) | TRANSISTOR | | |

# PARTS LIST

* New Parts
Parts without Parts No. are not supplied.
Les articles non mentionnes dans le Parts No. ne sont pas fournis.
Teile ohne Parts No. werden nicht geliefert.

| Ref. No. 参照番号 | Address 位置 | New Parts 新 | Parts No. 部品番号 | Description 部品名／規格 | Destination 仕向 | Remarks 備考 |
|---|---|---|---|---|---|---|
| **MIC AMP. (X59-1000-10)** | | | | | | |
| R1 | | | RK73FB2A682J | CHIP R 6.8K J 1/10W | | |
| R2 | | | RK73FB2A221J | CHIP R 220 J 1/10W | | |
| R3 | | | RK73FB2A104J | CHIP R 100K J 1/10W | | |
| R4 | | | RK73FB2A153J | CHIP R 15K J 1/10W | | |
| R5 | | | RK73FB2A333J | CHIP R 33K J 1/10W | | |
| R6 -8 | | | RK73FB2A224J | CHIP R 220K J 1/10W | | |
| R9 | | | RK73FB2A474J | CHIP R 470K J 1/10W | | |
| R10 | | | RK73FB2A153J | CHIP R 15K J 1/10W | | |
| R11 | | | RK73FB2A562J | CHIP R 5.6K J 1/10W | | |
| R12 | | | RK73FB2A184J | CHIP R 180K J 1/10W | | |
| R13 | | | RK73FB2A224J | CHIP R 220K J 1/10W | | |
| R14 | | | RK73FB2A474J | CHIP R 470K J 1/10W | | |
| C1 | | | CC73FSL1H390J | CHIP C 39PF | | |
| C2 | | | CK73FB1H152K | CHIP C 0.0015UF | | |
| C3 | | | CC73FSL1H331K | CHIP C 330PF | | |
| C4 | | | CC73FSL1H561K | CHIP C 560PF | | |
| C5 | | | CC73FSL1H331K | CHIP C 330PF | | |
| D1 | | * | 1SS184 | CHIP DIODE | | |
| D2 | | * | 1SS181 | CHIP DIODE | | |
| IC1 | | | NJM4558M | IC(OP AMP X2) | | |
| Q1 | | | 2SC2712(Y) | CHIP TR | | |
| **MIC AMP., S-METER (X59-1010-10)** | | | | | | |
| R1 | | | RK73FB2A473J | CHIP R 47K J 1/10W | | |
| R2 | | | RK73FB2A474J | CHIP R 470K J 1/10W | | |
| R3 | | | RK73FB2A473J | CHIP R 47K J 1/10W | | |
| R4 | | | RK73FB2A474J | CHIP R 470K J 1/10W | | |
| R5 | | | RK73FB2A224J | CHIP R 220K J 1/10W | | |
| R6 | | | RK73FB2A184J | CHIP R 180K J 1/10W | | |
| R7 | | | RK73FB2A473J | CHIP R 47K J 1/10W | | |
| R8 | | | RK73FB2A472J | CHIP R 4.7K J 1/10W | | |
| R9 | | | RK73FB2A103J | CHIP R 10K J 1/10W | | |
| R10 | | | RK73FB2A822J | CHIP R 8.2K J 1/10W | | |
| C1 | | | CK45FB1H472K | | | |
| D1 | | | 1SS184 | CHIP DIODE | | |
| D2 | | | 1SS181 | CHIP DIODE | | |
| IC1 | | | NJM4558M | IC(OP AMP X2) | | |
| **ALERT, VACANT CH. (X59-1020-10)** | | | | | | |
| R1 | | | RK73FB2A103J | CHIP R 10K J 1/10W | | |
| R2 | | | RK73FB2A472J | CHIP R 4.7K J 1/10W | | |
| R3 | | | RK73FB2A223J | CHIP R 22K J 1/10W | | |
| R4 | | | RK73FB2A273J | CHIP R 27K J 1/10W | | |
| R5 -7 | | | RK73FB2A103J | CHIP R 10K J 1/10W | | |
| C1 | | | CK73FB1H102K | CHIP C 0.001UF | | |
| D1 | | | 1SS181 | CHIP DIODE | | |
| Q1 -4 | | | 2SC2712(Y) | CHIP TRANSISTOR | | |
| **CENTER DETECTOR (X59-1030-10)** | | | | | | |
| R1 | | | RK73FB2A224J | CHIP R 220K J 1/10W | | |
| R2 | | | RK73FB2A222J | CHIP R 2.2K J 1/10W | | |
| R3 | | | RK73FB2A332J | CHIP R 3.3K J 1/10W | | |
| R4 | | | RK73FB2A333J | CHIP R 33K J 1/10W | | |
| R5 ,6 | | | RK73FB2A104J | CHIP R 100K J 1/10W | | |
| R7 | | | RK73FB2A563J | CHIP R 56K J 1/10W | | |

# PARTS LIST

* New Parts
Parts without Parts No. are not supplied.
Les articles non mentionnes dans le Parts No. ne sont pas fournis.
Telle onne Parts No. werden nicht gellefert.

| Ref. No. 参照番号 | Address 位置 | New Parts 新 | Parts No. 部品番号 | Description 部品名／規格 | Destination 仕向 | Remarks 備考 |
|---|---|---|---|---|---|---|
| R8 | | | RK73FB2A102J | CHIP R 1.0K J 1/10W | | |
| R9 ,10 | | | RK73FB2A103J | CHIP R 10K J 1/10W | | |
| R11 | | | RK73FB2A102J | CHIP R 1.0K J 1/10W | | |
| R12 | | | RK73FB2A104J | CHIP R 100K J 1/10W | | |
| R13 ,14 | | | R92-0670-05 | CHIP R 0 OHM | | |
| C1 ,2 | | | CK73FB1H102K | CHIP C 0.001UF | | |
| C3 ,4 | | | CK73FF1E473Z | CHIP C 0.047UF | | |
| C5 | | | CK73FB1H102K | CHIP C 0.001UF | | |
| D1 | | | 1SS181 | CHIP DIODE | | |
| IC1 | | | NJM4558M | IC(OP AMP X2) | | |
| Q1 | | | 2SC2714(Y) | CHIP TRANSISTOR | | |
| **COMPOUND (X60-1290-10)** | | | | | | |
| R1 | | | RK73FB2A103J | CHIP R 10K J 1/10W | | |
| R2 | | | RK73FB2A223J | CHIP R 22K J 1/10W | | |
| R3 | | | RK73FB2A682J | CHIP R 6.8K J 1/10W | | |
| R4 | | | RK73FB2A474J | CHIP R 470K J 1/10W | | |
| R5 | | | RK73FB2A472J | CHIP R 4.7K J 1/10W | | |
| R6 | | | RK73FB2A332J | CHIP R 3.3K J 1/10W | | |
| R7 | | | RK73FB2A682J | CHIP R 6.8K J 1/10W | | |
| R8 | | | RK73FB2A332J | CHIP R 3.3K J 1/10W | | |
| R9 | | | RK73FB2A393J | CHIP R 39K J 1/10W | | |
| R10 | | | RK73FB2A472J | CHIP R 4.7K J 1/10W | | |
| R11 | | | R92-0670-05 | CHIP R 0 OHM | | |
| C1 | | | CK73FB1H102K | CHIP C 0.001UF | | |
| D1 | | | 1SS184 | CHIP DIODE | | |
| Q1 | | | 2SC2712(Y) | CHIP TRANSISTOR | | |
| Q2 ,3 | | | 2SC3295(B) | CHIP TRANSISTOR | | |
| Q4 | | | 2SC2712(BL) | CHIP TRANSISTOR | | |
| Q5 | | | 2SC2712(Y) | CHIP TRANSISTOR | | |
| Q6 | | | 2SC2712(BL) | CHIP TRANSISTOR | | |
| **SQUELCH CONTROL (X59-1040-10)** | | | | | | |
| C1 | | | CC45CH1H180J | CERAMIC 18PF J | | |
| C2 | | | CC45RH1H120J | CERAMIC 12PF J | | |
| C3 | | | CC45CH1H010C | CERAMIC 1.0PF C | | |
| C4 | | | CC45RH1H070D | CERAMIC 7.0PF D | | |
| C5 | | | CC45CH1H180J | CERAMIC 18PF J | | |
| C6 | | | CK45B1H102K | CERAMIC 1000PF K | | |
| C7 | | | C91-0117-05 | CERAMIC 0.01UF K | | |
| C8 | | | CK45B1H102K | CERAMIC 1000PF K | | |
| C9 | | | C91-0117-05 | CERAMIC 0.01UF K | | |
| C10 | | | CK45B1H102K | CERAMIC 1000PF K | | |
| C11 | | | CC45CH1H010C | CERAMIC 1.0PF C | | |
| C12 | | | CC45CH1H120J | CERAMIC 12PF J | | |
| C13 | | | CC45CH1H050C | CERAMIC 5.0PF C | | |
| C14 | | | CC45SL1H680J | CERAMIC 68PF J | | |
| C15 ,16 | | | C91-0117-05 | CERAMIC 0.01UF K | | |
| C17 | | | CC45CH1H100D | CERAMIC 10PF D | | |
| C18 | | | C91-0117-05 | CERAMIC 0.01UF K | | |
| C19 | | | CK45B1H681K | CERAMIC 680PF K | | |
| C20 ,21 | | | C91-0117-05 | CERAMIC 0.01UF K | | |
| C22 | | | C91-0757-05 | CERAMIC 0.001UF K | | |
| C23 | | | C91-0117-05 | CERAMIC 0.01UF K | | |
| C24 | | | C092M1H473K | MYLAR 0.047UF K | | |

# PARTS LIST

* New Parts
Parts without Parts No. are not supplied.
Les articles non mentionnes dans le Parts No. ne sont pas fournis.
Teile ohne Parts No. werden nicht geliefert.

| Ref. No. 参照番号 | Address 位置 | New Parts 新 | Parts No. 部品番号 | Description 部品名／規格 | Destination 仕向 | Remarks 備考 |
|---|---|---|---|---|---|---|
| C25 | | | CE04W1H010M | ELECTRO 1.0UF 50WV | | |
| C25 | | | C90-2033-05 | ELECTRO 1000UF 16WV | | |
| C28 ,29 | | | CE04W1A470M | ELECTRO 47UF 10WV | | |
| C31 | | | CQ92M1H104K | MYLAR 0.10UF K | | |
| C32 | | | CE04W1A221M | ELECTRO 220UF 10WV | | |
| C33 | | | CE04W1A470M | ELECTRO 47UF 10WV | | |
| C34 ,35 | | | C91-0117-05 | CERAMIC 0.01UF K | | |
| C36 | | | CC45SL1H101J | CERAMIC 100PF J | | |
| C37 | | | CC45CH1H070D | CERAMIC 7.0PF D | | |
| C38 | | | CC45CH1H180J | CERAMIC 18PF J | | |
| C39 | | | C91-0117-05 | CERAMIC 0.01UF K | | |
| C40 | | | CE04W1A470M | ELECTRO 47UF 10WV | | |
| C41 | | | CC45CH1H240J | CERAMIC 24PF J | | |
| C42 | | | CK45B1H471K | CERAMIC 470PF K | | |
| C43 | | | CK45B1H102K | CERAMIC 1000PF K | | |
| C44 | | | CC45CH1H330J | CERAMIC 33PF J | | |
| C45 | | | C91-0667-05 | CERAMIC 0.0047UF K | | |
| C46 | | | CC45CH1H330J | CERAMIC 33PF J | | |
| C47 | | | C91-0117-05 | CERAMIC 0.01UF K | | |
| C48 | | | CC45SL1H121J | CERAMIC 120PF J | | |
| C49 | | | CK45B1H102K | CERAMIC 1000PF K | | |
| C50 | | | C91-0117-05 | CERAMIC 0.01UF K | | |
| C51 | | | C91-0117-05 | CERAMIC 0.01UF K | | |
| C52 -54 | | | CF92V1H104J | MF 0.10UF J | | |
| C55 | | | CK45B1H102K | CERAMIC 1000PF K | | |
| C56 | | | CE04W1H010M | ELECTRO 1.0UF 50WV | | |
| C57 | | | CK45B1H102K | CERAMIC 1000PF K | | |
| C58 ,59 | | | C91-0117-05 | CERAMIC 0.01UF K | | |
| C60 | | | CE04W1C330M | ELECTRO 33UF 16WV | | |
| C61 | | | C91-0117-05 | CERAMIC 0.01UF K | | |
| C62 | | | CE04W1C100M | ELECTRO 10UF 16WV | | |
| C63 | | | CE04W1C330M | ELECTRO 33UF 16WV | | |
| C64 | | | C91-0117-05 | CERAMIC 0.01UF K | | |
| C65 | | | CE04W1C100M | ELECTRO 10UF 16WV | | |
| C66 | | | C91-0117-05 | CERAMIC 0.01UF K | | |
| C67 | | | CE04W1C100M | ELECTRO 10UF 16WV | | |
| C68 | | | CE04W1A101M | ELECTRO 100UF 10WV | | |
| C69 | | | C91-0117-05 | CERAMIC 0.01UF K | | |
| C70 | | | CS15E1C2R2M | TANTAL 2.2UF 16WV | | |
| C71 | | | CS15E1VR68M | TANTAL 0.68UF 35WV | | |
| C72 | | | CS15E1V010M | TANTAL 1.0UF 35WV | | |
| C73 | | | CE04W1A470M | ELECTRO 47UF 10WV | | |
| C74 | | | C91-0117-05 | CERAMIC 0.01UF K | | |
| C76 | | | CK45B1H102K | CERAMIC 1000PF K | | |
| C77 | | | CE04W1HR47M | ELECTRO 0.47UF 50WV | | |
| C79 ,80 | | | C91-0117-05 | CERAMIC 0.01UF K | | |
| C81 | | | CQ92M1H333K | MYLAR 0.033UF K | | |
| C82 -85 | | | CE04W1H010M | ELECTRO 1.0UF 50WV | | |
| C86 | | | CK45B1H102K | CERAMIC 1000PF K | | |
| C87 | | | CE04W1C470M | ELECTRO 47UF 16WV | | |
| C88 | | | CE04W1H010M | ELECTRO 1.0UF 50WV | | |
| C89 | | | CK45B1H152K | CERAMIC 1500PF K | | |
| C90 | | | CE04W1C100M | ELECTRO 10UF 16WV | | |
| C93 | | | CE04W1A470M | ELECTRO 47UF 10WV | | |
| C94 | | | CK45B1H102K | CERAMIC 1000PF K | | |

# PARTS LIST

* New Parts
Parts without Parts No. are not supplied.
Les articles non mentionnes dans le Parts No. ne sont pas fournis.
Teile ohne Parts No. werden nicht geliefert.

| Ref. No. 参照番号 | Address 位置 | New Parts 新 | Parts No. 部品番号 | Description 部品名／規格 | Destination 仕向 | Remarks 備考 |
|---|---|---|---|---|---|---|
| C95 | | | CE04W1H0R1M | ELECTRO 0.1UF 50WV | | |
| C96 | | | CC45SL1H101J | CERAMIC 100PF J | | |
| C97 | | | CK45B1H102K | CERAMIC 1000PF K | | |
| C98 | | | C91-1008-05 | CERAMIC 0.022UF K | | |
| C99 | | | CQ92M1H153K | MYLAR 0.015UF K | | |
| C100 | | | CQ92M1H183K | MYLAR 0.018UF K | | |
| C101 | | | CQ92M1H333K | MYLAR 0.033UF K | | |
| C102 | | | CE04W1A470M | ELECTRO 47UF 10WV | | |
| C103 | | | CQ92M1H473K | MYLAR 0.047UF K | | |
| C104 | | | CE04W1H010M | ELECTRO 1.0UF 50WV | | |
| C115 | | | CK45B1H102K | CERAMIC 1000PF K | | |
| C116 | | | C91-0117-05 | CERAMIC 0.01UF K | | |
| C117 | | | CK45B1H102K | CERAMIC 1000PF K | | |
| C118 | | | CQ92M1H153K | MYLAR 0.015UF K | | |
| TC1 | | | C05-0328-05 | TRIMMING CAP (50P) | | |
| - | | | E40-0211-05 | PIN CONNECTOR (2P) | | |
| - | | | E40-0273-05 | PIN CONNECTOR (2P) | | |
| - | | | E40-0373-05 | PIN CONNECTOR (3P) | | |
| - | | | E40-0473-05 | PIN CONNECTOR (4P) | | |
| - | | | E40-0573-05 | PIN CONNECTOR (5P) | | |
| - | | | E40-0873-05 | PIN CONNECTOR (8P) | | |
| JP9 | | | E31-1959-05 | CONNECTING WIRE | | |
| JP10 | | | E31-2170-15 | CONNECTING WIRE | | |
| JP12-14 | | | E31-2170-15 | CONNECTING WIRE | | |
| JP23 | | | E31-2170-15 | CONNECTING WIRE | | |
| JP27 | | | E31-1960-05 | CONNECTING WIRE | | |
| JP35 | | | E31-2170-15 | CONNECTING WIRE | | |
| JP37 | | | E31-2170-15 | CONNECTING WIRE | | |
| JP39 | | | E31-2170-15 | CONNECTING WIRE | | |
| - | | | F02-0417-04 | HEAT SINK(CAP/ADDITION TYPE) | | |
| L1 ,2 | | * | L34-2264-05 | COIL (220MHZ) | | |
| L3 | | | L15-0306-05 | LOW-FREQUENCY CHOKE COIL | | |
| L4 | | * | L79-0683-05 | HELICAL RESONATOR | | |
| L5 | | * | L34-2265-05 | COIL (PLL HZT) | | |
| L6 | | | L34-0749-05 | COIL (21.6MHZ) | | |
| L7 | | * | L30-0535-05 | IFT (21MHZ) | | |
| L8 | | | L71-0251-05 | MCF | | |
| L9 | | * | L30-0536-05 | IFT (21MHZ) | | |
| L10 ,11 | | | L40-1021-12 | SMALL FIXED INDUCTOR(1MH) | | |
| L12 | | | L79-0446-05 | FILTER (CFY455S) | | |
| L13 | | | L40-1001-14 | SMALL FIXED INDUCTOR(10UH) | | |
| L14 | | | L77-1260-05 | CRYSTAL RESONATOR(20.480MHZ) | | |
| L15 | | | L30-0531-05 | IFT (455KHZ) | | |
| L16 | | | L72-0315-05 | CERAMIC FILTER (CFW455F) | | |
| L17 | | | L30-0503-05 | IFT (455KHZ) | | |
| L19 | | | L34-1023-05 | COIL (/3.3T) | | |
| R42 | | | RS14KB3D33DJ | FL-PROOF RS 33 J 2W | | |
| VR1 | | | R12-2413-05 | TRIMMING POT. (5K) | | |
| VR2 -4 | | | R12-4413-05 | TRIMMING POT. (50K) | | |
| VR5 | | | R12-3443-05 | TRIMMING POT. (10K) | | |
| VR6 | | | R12-5420-05 | TRIMMING POT. (100K) | | |
| VR7 | | | R12-2413-05 | TRIMMING POT. (5K) | | |

# PARTS LIST

* New Parts
Parts without Parts No. are not supplied.
Les articles non mentionnes dans le Parts No. ne sont pas fournis.
Telle ohne Parts No. werden nicht geliefert.

| Ref. No. 参照番号 | Address 位置 | New Parts 新 | Parts No. 部品番号 | Description 部品名／規格 | Destination 仕向 | Remarks 備考 |
|---|---|---|---|---|---|---|
| D1 ,2 | | | 1N4448 | DIODE | | |
| D1 ,2 | | | 1S1555 | DIODE | | |
| D3 ,4 | | | 1N60 | DIODE | | |
| D5 ,6 | | | 1N4448 | DIODE | | |
| D5 ,6 | | | 1S1555 | DIODE | | |
| D7 | | | MTZ11JC | ZENER DIODE | | |
| D8 | | | 1N4448 | DIODE | | |
| D8 | | | 1S1555 | DIODE | | |
| IC1 | | | UPC1241H | IC | | |
| IC2 | | | TA7761P | IC | | |
| IC3 | | | MB3756 | IC | | |
| IC4 | | | NJM78M06A | IC | | |
| Q1 ,2 | | | 3SK129(S) | FET | | |
| Q3 ,4 | | | 2SC2668(Y) | TRANSISTOR | | |
| Q5 | | | 2SC496(Y) | TRANSISTOR | | |
| Q6 ,7 | | | 2SC2458(Y) | TRANSISTOR | | |
| Q8 | | | 2SC1775(E) | TRANSISTOR | | |
| Q9 | | | 2SC2458(Y) | TRANSISTOR | | |
| Q10 ,11 | | | DTC114ES | DIGITAL TRANSISTOR | | |
| Q12 | | | 2SC3113(B) | TRANSISTOR | | |
| TH1 | | | 112-502-2 | THERMISTOR | | |
| TH2 | | | 112-302-2 | THERMISTOR | | |
| - | | | X59-1000-10 | MIC AMP UNIT | | |
| - | | | X59-1010-10 | MIC AMP,S-METER UNIT | | |
| - | | | X59-1020-10 | ALERT VACANT CH UNIT | | |
| - | | | X59-1030-10 | CENTER STOP UNIT | | |
| - | | | X59-1040-10 | SQ UNIT | | |

# DISASSEMBLY

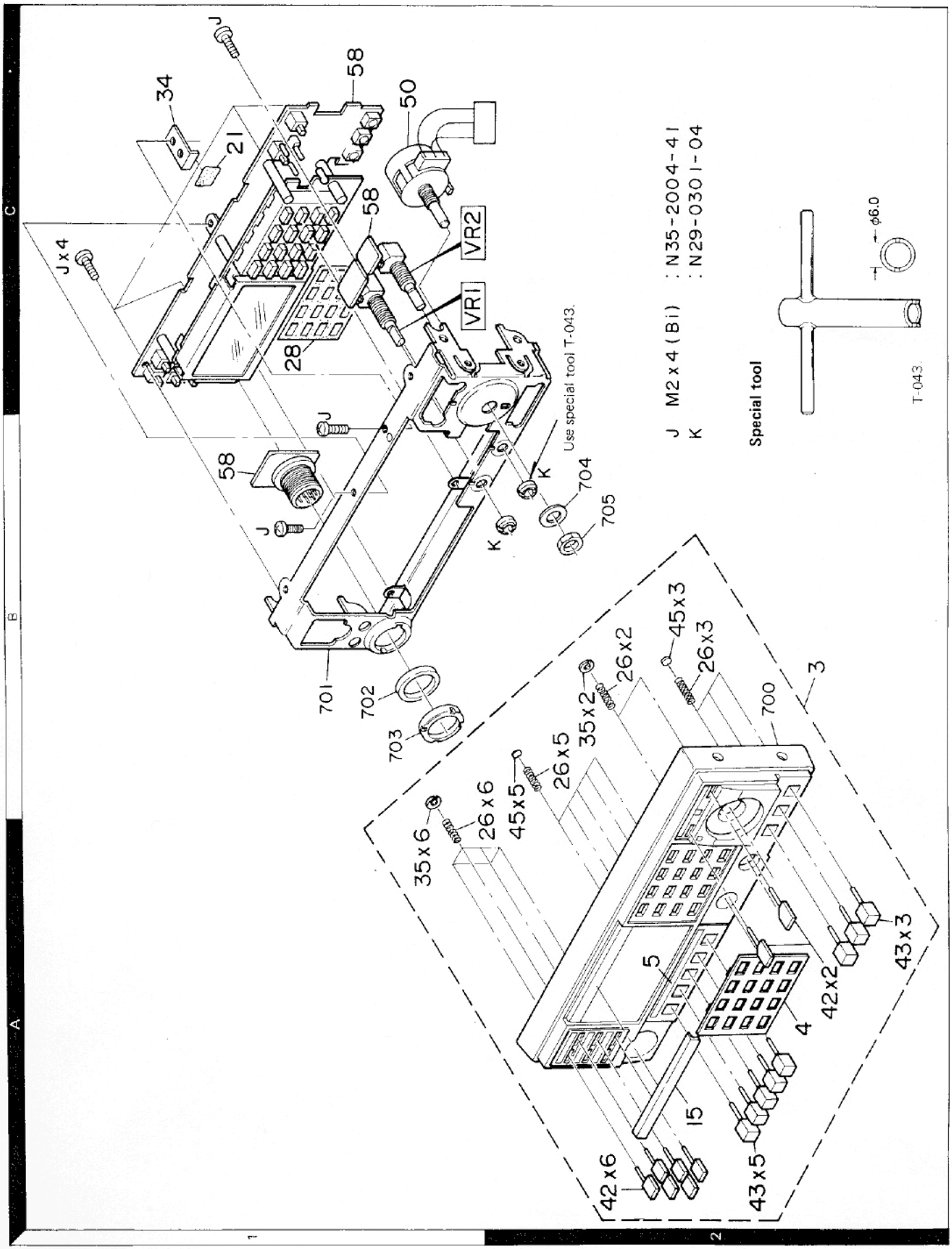




Parts with the exploded numbers larger than 700 are not supplied.

# DISASSEMBLY

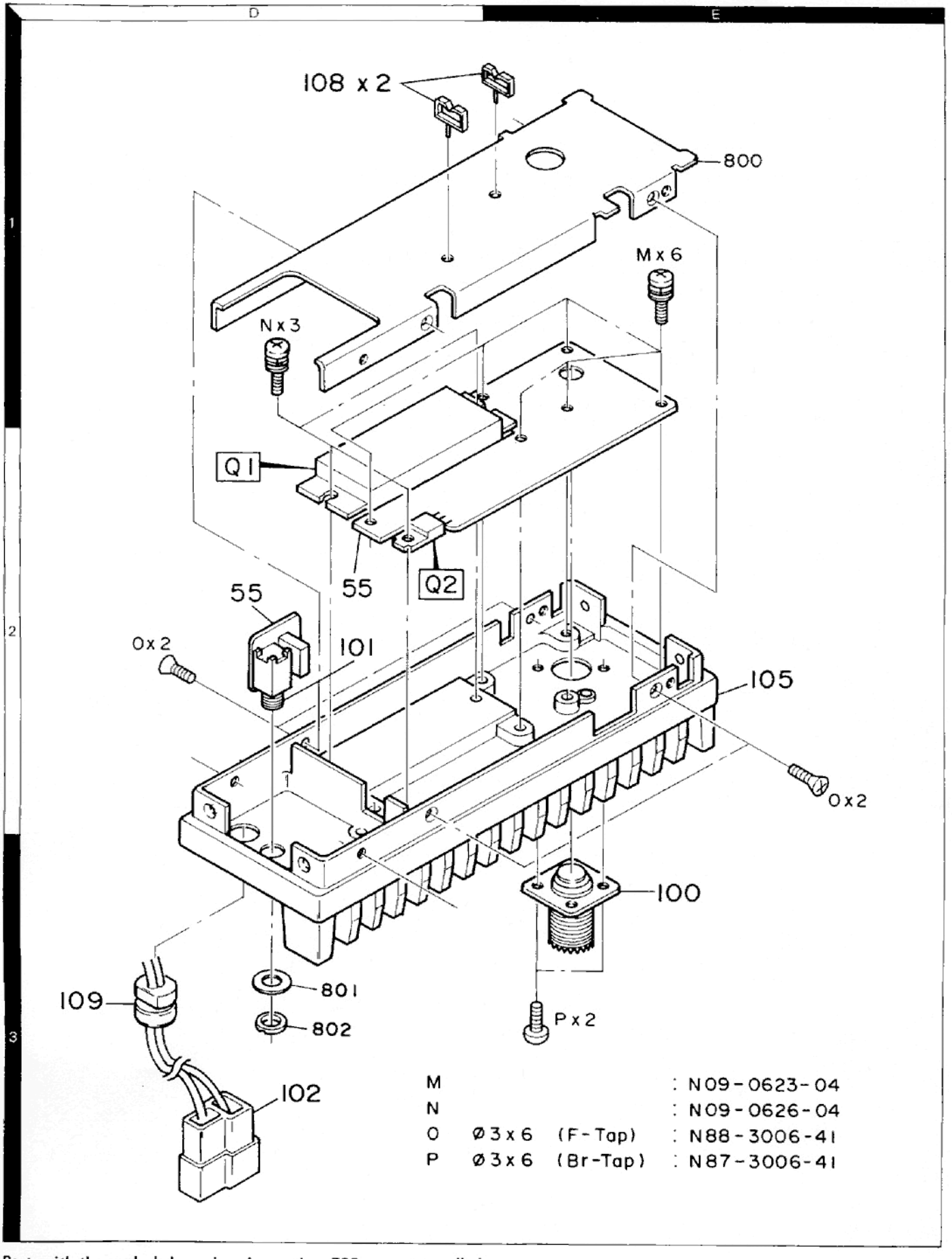


| | | | |
|---|---|---|---|
| M | | | : N09-0623-04 |
| N | | | : N09-0626-04 |
| O | Ø3x6 | (F-Tap) | : N88-3006-41 |
| P | Ø3x6 | (Br-Tap) | : N87-3006-41 |

Parts with the exploded numbers larger than 700 are not supplied.

# DISASSEMBLY

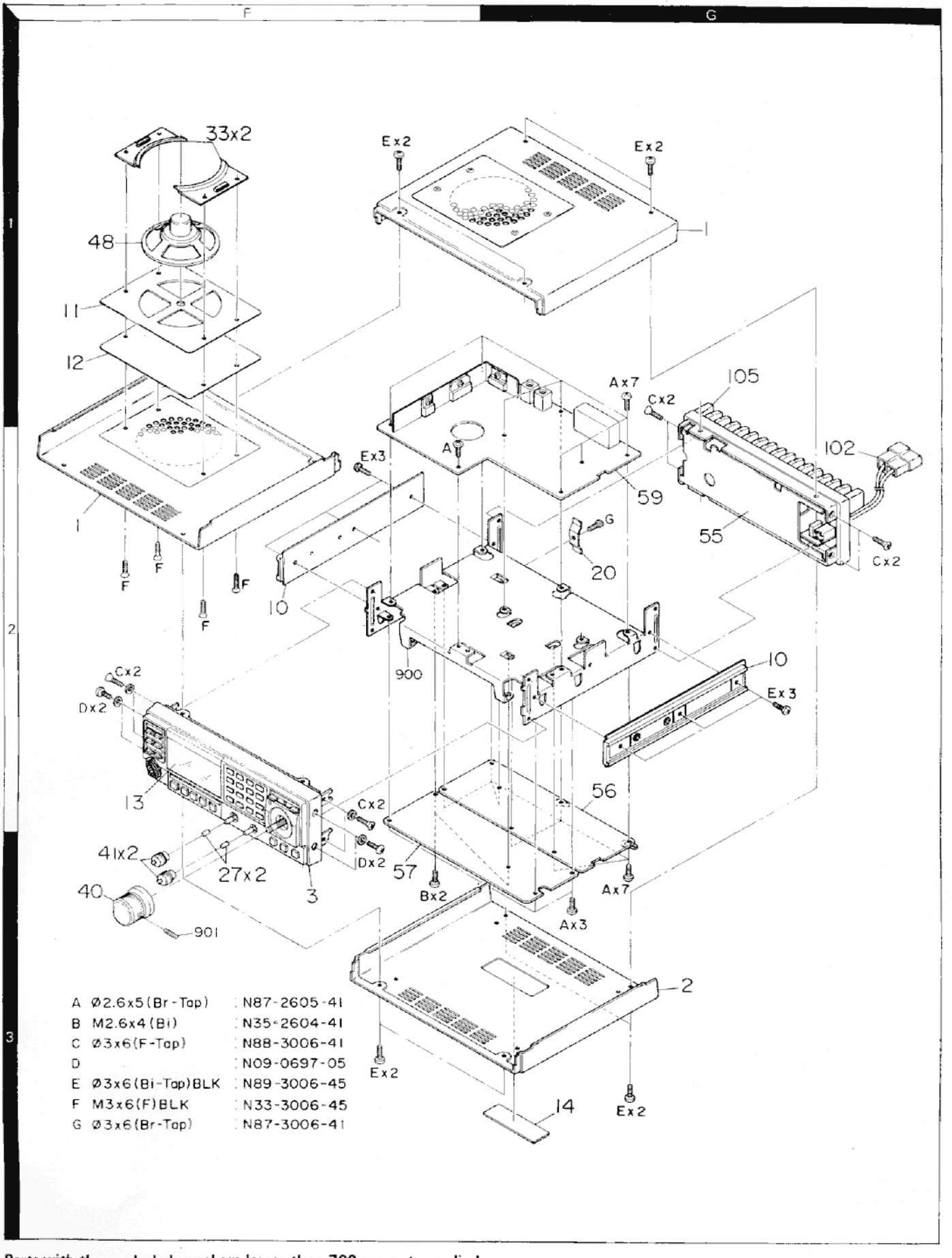


| | | |
|---|---|---|
| A | Ø2.6x5(Br-Tap) | : N87-2605-41 |
| B | M2.6x4(Bi) | : N35-2604-41 |
| C | Ø3x6(F-Tap) | : N88-3006-41 |
| D | | : N09-0697-05 |
| E | Ø3x6(Bi-Tap)BLK | : N89-3006-45 |
| F | M3x6(F)BLK | : N33-3006-45 |
| G | Ø3x6(Br-Tap) | : N87-3006-41 |

Parts with the exploded numbers larger than 700 are not supplied.

# ADJUSTMENT

## REQUIRED TEST EQUIPMENT

1. **DC V.M**
   1) High input impedance
2. **RF VTVM (RF V.M)**
   1) Input impedance : 1MΩ min., 2pF max.
   2) Voltage range : F.S = 10mV ~ 300V
   3) Frequency range : Up to 220MHz
3. **Frequency Counter (f. counter)**
   1) Input sensitivity : Approx. 50mV
   2) Frequency range : Up to 220MHz
4. **DC Power Supply**
   1) Voltage : 10V ~ 17V, variable
   2) Current : 8A min.
5. **RF Power Meter**
   1) Measurement range Approx. : 50W
   2) Input impedance : 50Ω
   3) Frequency range : 220MHz
6. **AF VTVM (AF V.M)**
   1) Input impedance : 1MΩ min.
   2) Voltage range : F.S = 1mV ~ 30V
   3) Frequency range : 50Hz ~ 10kHz
7. **AF Generator (AG)**
   1) Output frquency : 100Hz ~ 10kHz
   2) Output voltage : 0.5mV ~ 1V
8. **Linear Detector**
   1) Frequency range : 220MHz
9. **Field Strength Meter**
   1) Frequency range : 220MHz
10. **Directional Coupler**
11. **Oscilloscope**
    1) High sensitivity oscilloscope with horizontal input terminal
12. **SSG**
    1) Frequency range : 144~225MHz
    2) Modulation : AM and FM MOD.
    3) Output level : −20dB to 100dB
13. **Dummy Load**
    1) 8Ω, 5W (approx.)
14. **Sweep Generator**
    1) Sweep range : 220~225MHz
15. **Tracking generator**

## PREPARATION

1) Unless otherwise specified, knobs and switches should be set as follows **Table 10.**

| | | | |
|---|---|---|---|
| POWER SW | ON | SQUELCH VR | MIN |
| AL. SW | OFF | AF GAIN VR | MIN |
| PRIO SW | OFF | PHONE SW | OFF |
| LAMP SW | OFF | TONE SW | OFF |
| REV SW | OFF | VOICE SW | OFF |
| SCAN SW | OFF | DCL SW | OFF |
| LOW SW | OFF | C. SQ SW | OFF |
| F. LOCK SW | OFF | CS SW | OFF |

**Table 10**

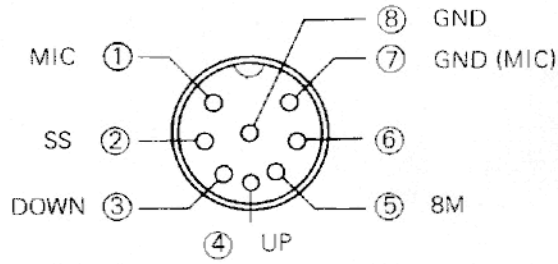


**Fig. 19 MIC terminals (view from front panel side)**

2) Use an insulated adjusting rod to adjust trimmers and coils.
3) To prevent damaging SSG, never set the stand by switch to SEND while adjusting the receiver section.
4) Be sure to turn the power switch OFF, before connecting the power cable to a power source.
5) SSG output levels are those at the time the output terminal is open.

# ADJUSTMENT

## RX ADJUSTMENT

NOTE : COMP = COMPOUND UNIT (X60-1290-10)

| Item | Condition | Measurement | | | Adjustment | | | Specification/Remarks |
|---|---|---|---|---|---|---|---|---|
| | | Test equipment | Unit | Terminal | Unit | Part | Method | |
| 1. Reset | 1) Set the power SW on, while depressing PS key. Then, release the PS key. | Display | | | | |   | Tone sounds. Display shown 0000 1 |
| | 2) When the lithium battery is replaced, the microprocessor must be reset. Set the power SW on, while depressing PS key and terminal shorted (near Q6 position) on CONTROL unit by driver, etc. Then, release the PS key. | | | | | | | |
| 2. Voltage check | 1) Power supply : 13.8V DC SQL VR ↺ MIN (fully CCW) | DC VM | COMP. | 8R | | JP18 | | 7.8V–8.6V |
| | | | | 8C | | ⑦-1 | | 7.8V–8.6V |
| | | | | 6C | | ⑩-1 | | 5.6V–6.4V |
| | | | | 8T | | ⑪-4 | | 0.3V or less |
| | 2) Transmit. | | | 8T | | | | 7.8V–8.6V |
| | | | | 8R | | JP18 | | 0.3V or less |
| | | | PLL | DB | | | | 7V–13.5V |
| 3. PLL | 1) IF level Display : 4.995 | SCOPE (10 : 1 probe) | PLL | TP1 (R74) | PLL | L14, L15 | MAX When PLL leep is unlocked, ADJ TC4. | 2.0Vp-p or more. |
| | 2) RX VCO (RX) Display : 0.000 | DC V.M | | TP2 (C55) | | TC4 | 6.5V | ±0.1V |
| | 3) TX VCO Display : 0.000 | | | TP3 (R17) (collector Q5) | | TC1 | 2.0V When PLL loop is unlocked, ADJ TC1. | (1.5V–2.9V) |
| | 4) Receive Display : 4.995 | | | TP2 (C55) | | | | 3.5V–5.0V Confirm. |
| | 5) Transmit Display : 4.995 | | | TP3 (R17) | | | | 4.5V–5.5V Confirm. |
| | 6) HET. Frequency Receive Display : 3.000 | f.counter | | LR (② -6) | | L17 | 202.065MHz | ±100Hz |
| 4. Helical | 1) Connect the sweep gen. to ANT terminal. Output : 10dBμ Disconnect the No. ③ connector (SF, GND). | Detctor SCOPE | COMP. | TP1 | COMP. | L1, L2, L4 | Adjust to obtain the waveform as right fig. | 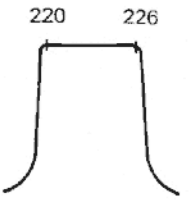  |
| 5. SF level | | RF V.M | COMP. | SF | COMP. | L6 | MAX | 0.2V or more |
| 6. GAIN | 1) Display : 2.560 ANT : SSG Output : 5dBμ MOD. : 1kHz DEV. 3kHz f : 222.560MHz | DC V.M (3.0V range) | COMP. | JP17 | COMP. | L5, L7, L9, L15 | Minimum voltage reading. Repeat 2 or 3 times. Then, minimum voltage reading with L7,9. | Ref. 4.5V |
| 7. IF TRAP Coil (179.75MHz) | 1) Display : 1.620 ANT : SSG Output : 80dBμ MOD/DIN : OFF f : 179.75MHz | AF V.M | Rear panel | SP. | COMP. | TC1 | MIN. | |

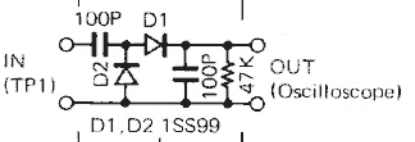

# ADJUSTMENT

| Item | Condition | Measurement | | | Adjustment | | | Specification/Remarks |
|---|---|---|---|---|---|---|---|---|
| | | Test equipment | Unit | Terminal | Unit | Part | Method | |
| 8. DISCRI S/N | 1) ANT 2.560<br>ANT SSG MOD. : 1kHz, DEV. 3kHz<br>Output : 60dBμ | AF V.M | Rear panel | SP | COMP. | L17 | MAX | |
| | 2) ANT SSG<br>Output : −6dBμ<br>(220.00−224.995MHz) | | | | | | | 12dB SINAD or more. |
| 9. S-Meter | 1) MOD. 1kHz : DEV. 3kHz 2.560<br>SSG output : 16dBμ | S-LCD | Front panel | | COMP. | VR6 | S-LCD should light. | |
| 10. Vacant CH level | 1) SSG output : −8dBμ<br>MOD/DEV. OFF<br>Short both TP3 terminals. | | | | COMP. | VR3 | Adjust threshold point. | |
| 11. SQ SEN. | 1) Threshold point : no signal | | Front panel | SQL VR | | | Audio noise will disappear.<br>C.TUNE indicator off. | 8 : 30 − 12 : 00 |
| | 2) SSG output : −12dBμ | | | | | | C.TUNE indicator lights. | SQ open. |

## TX ADJUSTMENT

| Item | Condition | Measurement | | | Adjustment | | | Specification/Remarks |
|---|---|---|---|---|---|---|---|---|
| | | Test equipment | Unit | Terminal | Unit | Part | Method | |
| 1. DRIVE | 1) Transmit.<br>Display : 3,000<br>Disconnect the coax. cable from the DO terminal in the COMP. unit.<br>Connect the power meter to the DO terminal in the COMP. unit. | POWER (3W) | PLL | DO | PLL | TC2,3 | MAX | 0.25−0.45W |
| 2. POWER | 1) Connect the coax. cable from the DO terminal in the COMP. unit.<br>Display : 2.230 | P.M Ammeter in the DC power supply. | Rear panel | ANT | FINAL | VR3 | 28W ADJ.<br>RF LCD | 28W±0.5W<br>6.5A or less<br>All RF-LED's should light. |
| | 2) 0.000−4.995 | | | | | | | 24−33W or less<br>6.5A or less. |
| 3. LOW POWER | 1) HI/LOW SW : LOW<br>Display : 2.230 | Power meter | | ANT | FINAL | VR4 | 5W ADJ. | 5W±0.5W |
| 4. RF METER | 1) Confirm, then, HI/LOW SW : HI | RF-LCD | | | COMP. | VR4 | Adjust 5 LED's reading. | |
| 5−1 PROTECTION (null) | 1) FINAL unit | | | | FINAL | VR2 | MAX | |
| | 2) Display : 2.230<br>Transmit. | Power meter | Rear panel | ANT | | | | |
| | | DC multimeter | FINAL | TP | FINAL | VR1 | MIN | 0.6V or less. |

DO terminal

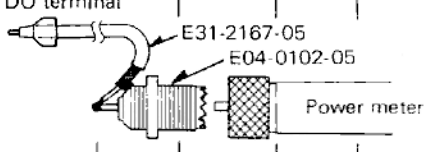

# ADJUSTMENT

| Item | Condition | Measurement | | | Adjustment | | | Specification/Remarks |
|---|---|---|---|---|---|---|---|---|
| | | Test equipment | Unit | Terminal | Unit | Part | Method | |
| 5–2. PROTECTION (Current) | 1) ANT : Open | DC supply V.M | | | FINAL | VR2 | 3A ADJ. | 6A or less |
| | 2) After adjusted, connect the power meter. | | | | | | | |
| 6. MIC GAIN DEV. | 1) Turn VR7 fully CCW. MIC 50mV/1kHz | Linear detector | | | COMP. | VR5 | ±4.5kHz ADJ. | ±100Hz |
| | 2) MIC 5mV/1kHz | | | | | VR7 | ±3.0kHz ADJ. | ±100Hz |
| 7. FREQ. check | 1) Display : 3.000 | f.counter | | | | | | 223.000±500Hz |
| 8. TONE | 1) Install TU7 in the CONTROL Press TONE key then, turn the encoder dial to 88.5kHz transmit. | Linear detector f.counter | | | | | | DEV. 0.6–0.9kHz FREQ. 88.5kHz Check output wave of linear detector output. display. |
| 11. Touch tone | 1) Transmit Press '3', '6' key at the same time. | Linear detector f.counter | | | COMP. | VR1 | 3kHz ADJ. | ±0.2kHz 1471.9Hz±1% |
| 12. SCAN | 1) SCAN SW : TO (Confirm VR1 at 12 o'clock.) SQL VR : ↺ MIN (CCW) Key board : Press "SC" | | | | CONT. | VR1 | Check scan time changed when VR1 turn. | |
| | 2) After ADJ. Key board : Press "C" | | | | CONT. | VR1 | Centered. | |

**Microprocessor operation check**

| Item | Condition | Operation check |
|---|---|---|
| 1. Keyboard | 1) SQL : MIN (CCW) ↺ Power SW : ON Reset microprocessor. (See ADJ of "RESET".) | S 0.000 1 |
| | 2) KEY : 5. 6. 7. 8. 9. PS. LO | Display does not change. S 0.000 1 |
| | 3) KEY : 2. 2. 2. 2. | Tone sounds. S 2.220 1 |

| Item | Condition | Operation check |
|---|---|---|
| 1. Keyboard | 4) KEY : 3. 3. 3. 3. 4. 3. 3. 3. | S 3.330 1 ⊟ 4.330 1 |
| | 5) KEY : 4. 4. 4. 4. | ⊟ 4.440 1 |
| | 6) KEY : 4. 5. 5. 5. | ⊟ 4.555 1 |

# ADJUSTMENT

| Item | Condition | Operation check |
|---|---|---|
| 1. Keyboard | 7) KEY : 4. 6. 6. 6. | 4.665 1 |
| | 8) KEY : 4. 7. 7. 7. | 4.775 1 |
| | 9) KEY : 4. 8. 8. 8. | 4.885 1 |
| | 10) KEY : 4. 9. 9. 9. | 4.995 1 |
| | 11) KEY : 3. 0. 0. 0. | 3.000 1 |
| | 12) KEY : OS | Tone sounds.<br>3.000 1 |
| | 13) Turn the M.CH dial to CCW 1 step. | 3.000 2 |
| | 14) KEY : M | Tone sounds. |
| | 15) Turn the M.CH dial to CCW.<br>2. 3. 4. . . . 19. A. b. d. U. 1. 2. | LCD Memory CH number should indicate.<br>Tone sounds.<br>U→1 (or 2→1) |
| 2. M. CH SW | 1) F. LOCK SW : ON | Display does not change when the M.CH dial turn to right and left.<br>3.000 2 |
| | 2) M.CH key : Press | Lights on |
| | 3) Turn the M.CH dial to the right 1 step. | Tone sounds.<br>0.000 1 |
| | 4) KEY : L0 | Tone sounds.<br>0.000 ☆ 1 |
| 3. REV. PRIO SW | 1) M.CH KEY : Press | Lights off |
| | 2) REV SW : ON | 3.000 1<br>4.600 1<br>REV LCD : Lights on |
| | 3) REV SW : OFF<br>PRIO SW : ON | 0.000 ☆ 1 |
| | | REV LCD : Lights off |
| | | PRIO LCD : Lights on |
| 4. AL SW | 1) PRIO SW : OFF<br>SQL VR : MIN (CCW)<br>AL SW : ON<br>VOL VR : 10:00 | 3.000 1<br>PRIO LCD : Lights off<br>Noise should momentarily mute approx. 0.3 seconds every 6–7 seconds. |

| Item | Condition | Operation check |
|---|---|---|
| 5. PS KEY | 1) Turn the M.CH dial to b CH.<br>KEY PS : ON | 3.000 b<br>Tone sounds. |
| | 2) AL SW : OFF<br>PRIO SW : ON | 0.000 b<br>PRIO LCD : Lights on |
| 6. SCAN KEY | 1) PRIO SW : OFF<br>KEY SC : ON | PRIO LCD : Lights off<br>0.005 b<br>Tone sounds.<br>The dispaly should step up in 5kHz approx. every 6 seconds. |
| 7. Lamp SW | 1) LAMP SW : ON | Key board illuminated. |
| | 2) OFF after checked.<br>KEY C : ON | |
| 8. DCL function (Digital channel link) | 1) Install MU-1 in the CONT. unit. | DCL LED : Lights on. |
| | 2) Reset microprocessor. See ADJ of "RESET". | |
| | 3) DCL KEY : Press | |
| | 4) Memory write to channel "A". | |
| | 5) Digital code setting<br>• CS KEY : Press | 00000 |
| | • C.SQ KEY : Press | ☆ lights. |
| | • RESET KEY : Press | 1_00 |
| | • CS KEY : Press again.<br>KEY : Press 4. 9. 4. 0. | 4940 |
| | 6) Check DCL operation.<br>Set the monitor's radio.<br>Condition :<br>• Display : 4.940<br>• DCL KEY : Press<br>• CHL KEY : Press | Both radio frequency changed display to "A" channel.<br>Tone sounds. |
| 9. DCS System (Digital code squelch) | 1) C.SQ KEY : Press | C.SQ LED's light.<br>Squelch closed. |
| | 2) Monitor's radio Mic PTT : Press | C.SQ LED's light off<br>Noise heard from SP. |
| 10. VS-1 check | 1) Install the VS-1 in the CONT. unit.<br>VOICE KEY : Press | Speaks during display's condition.<br>Confirm. |
| 11. PHONE function | 1) PHONE KEY : Press | Display shows A1–A15. |
| | 2) Turn to encoder dial. | |
| | 3) Set "A1" display<br>PS KEY : Press | |
| | 4) Input 7 digit for telephone number (ex. 6399000) | Telephone indicator light on. |
| | 5) PHONE KEY : Press again | |
| | 6) PHONE KEY : Press during transmit | Dial tone 7 digits are transmit automatically. |
| | 7) Return to receive mode.<br>PHONE KEY : Press again | |
| | 8) C KEY : Press | A– – |
| | 9) PHONE KEY : Press | Telephone indicator light off. |

# ADJUSTMENT

TOP VIEW

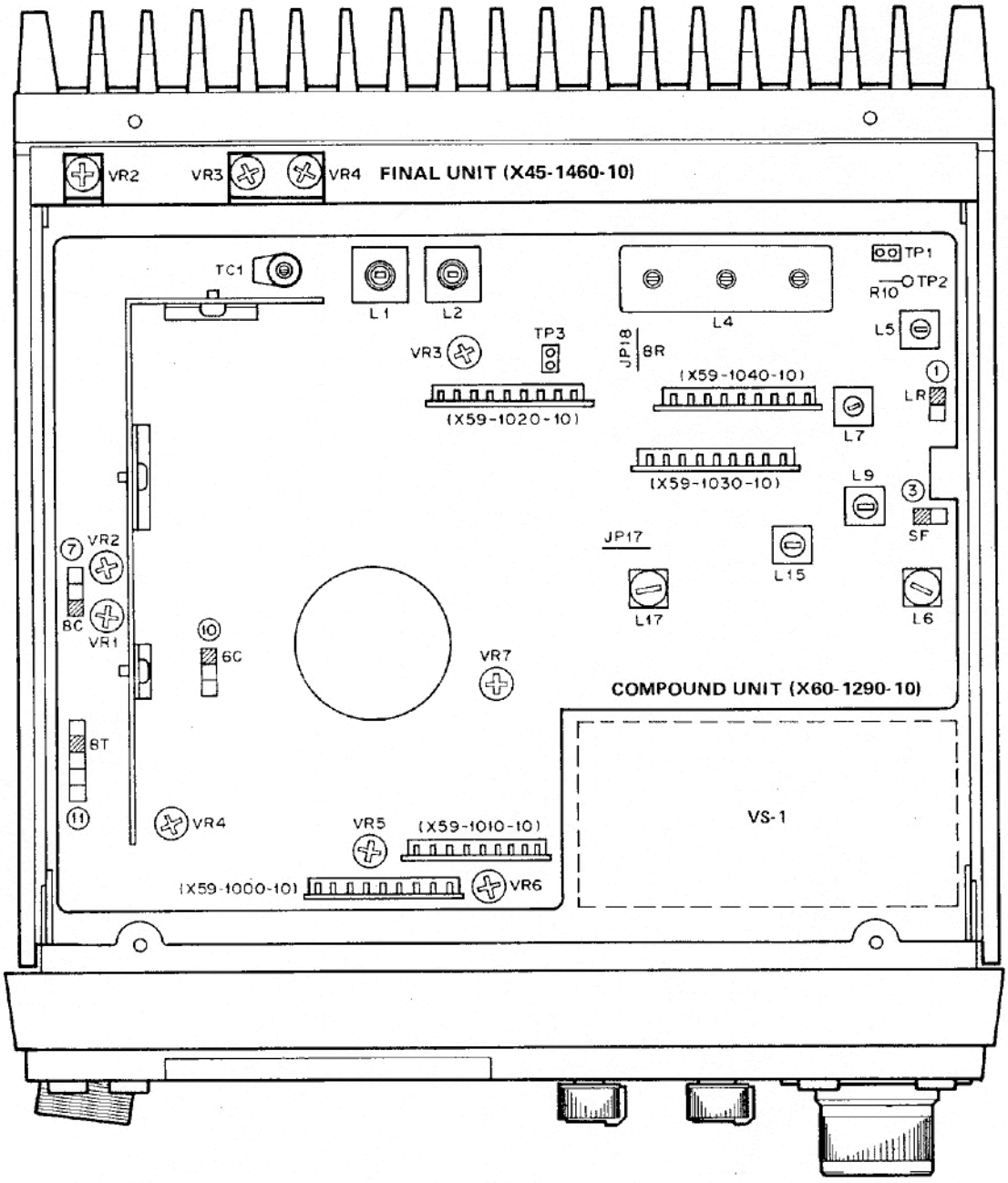


## COMPOUND UNIT

| | |
|---|---|
| L5,7,9,15 | : IF GAIN adj. |
| VR1 | : TOUCH TONE adj. |
| VR2 | : BEEP LEVEL adj. |
| VR3 | : VACANT CH. LEVEL adj. |
| VR4 | : RF-METER adj. |
| VR5 | : DEV. adj. ±4.5kHz |
| VR6 | : S-METER adj. |
| VR7 | : MIC GAIN adj. ±3kHz |

## FINAL UNIT

| | |
|---|---|
| VR2 | : Protection current |
| VR3 | : High power |
| VR4 | : Low power |

# ADJUSTMENT

BOTTOM VIEW

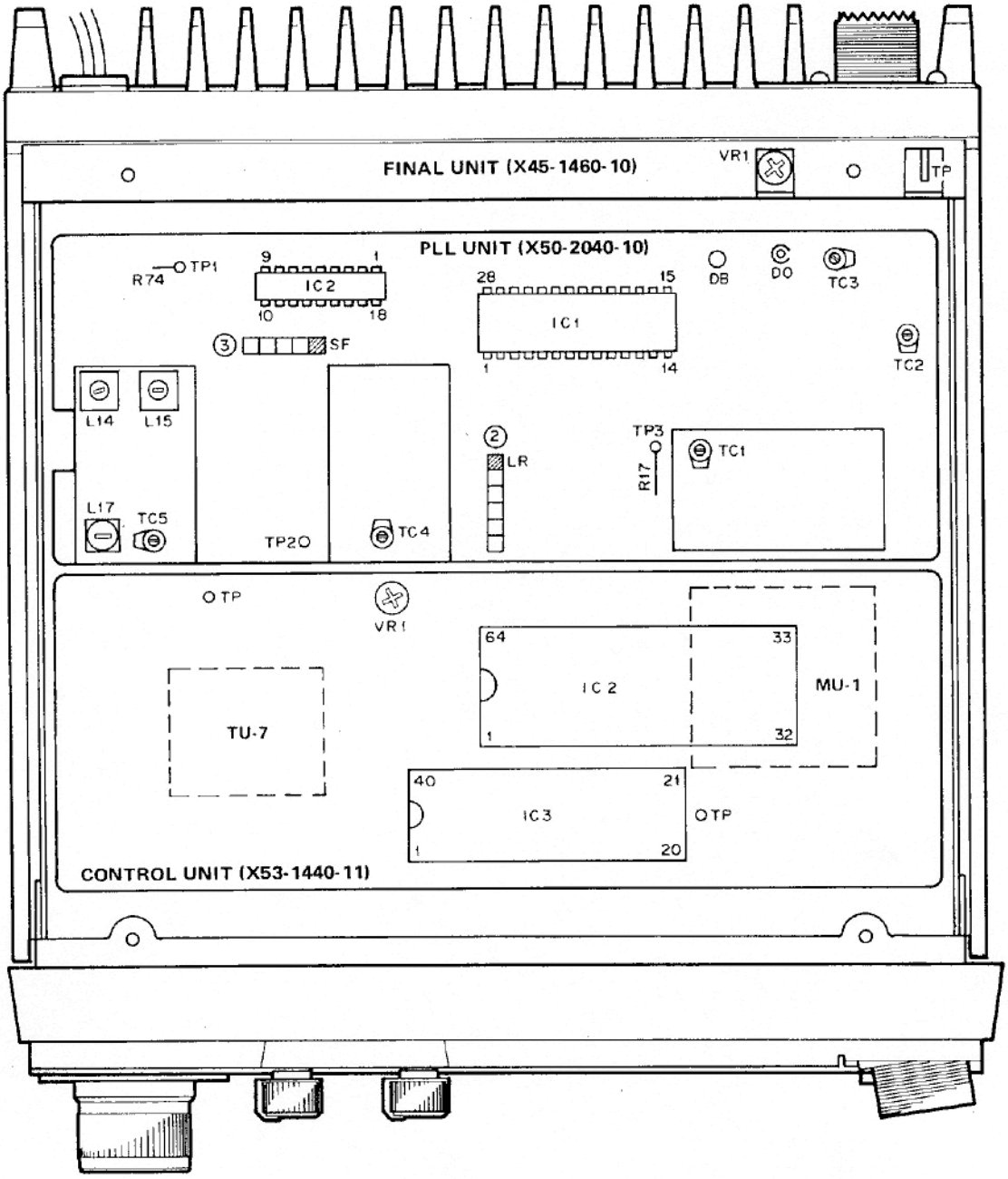


**FINAL UNIT**

VR1 : NULL POINT

**PLL UNIT**

TC1 : TX VCO (2.0V)
TC4 : RX VCO (6.0V)
L14,15 : PLL IF
L17 : 135.305MHz adj.

**CONTROL UNIT**

VR1 : SCAN SPEED

# TM-3530A PC BOARD VIEWS

## MIC AMP MODULE UNIT (X59-1000-10)
**Component side view**

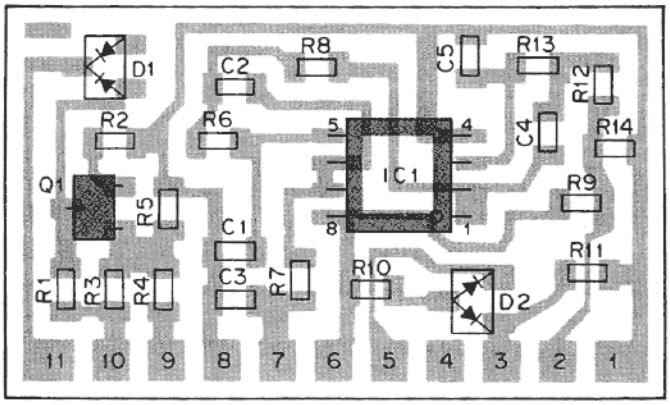


Q1 : 2SC2712(Y) IC1 : NJM4558M
D1 : 1SS184 D2 : 1SS181

## CENTER-DETECTOR UNIT (X59-1030-10)
**Component side view**

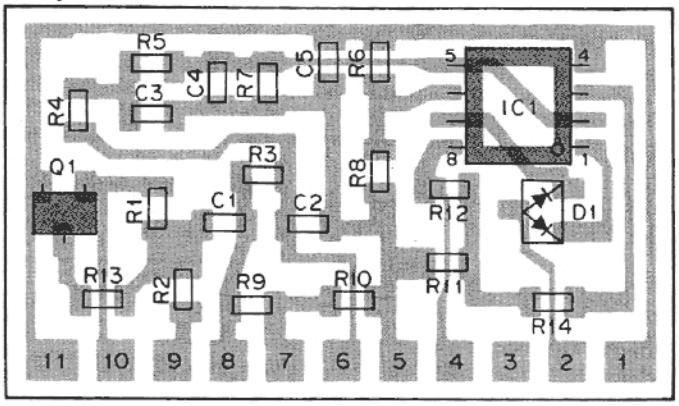


Q1 : 2SC2714(Y) IC1 : NJM4558M
D1 : 1SS181

## MIC AMP, S-METER UNIT (X59-1010-10)
**Component side view**

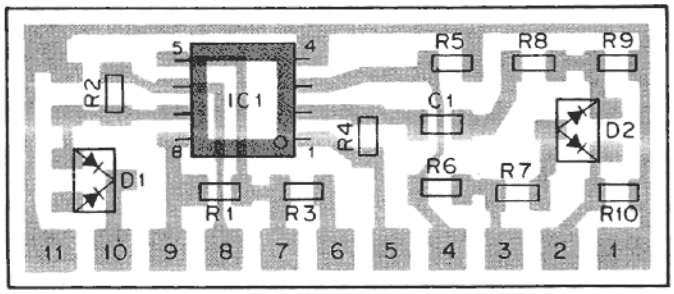


IC1 : NJM4558M
D1 : 1SS184 D2 : 1SS181

## SQUELCH CONTROL UNIT (X59-1040-10)
**Component side view**

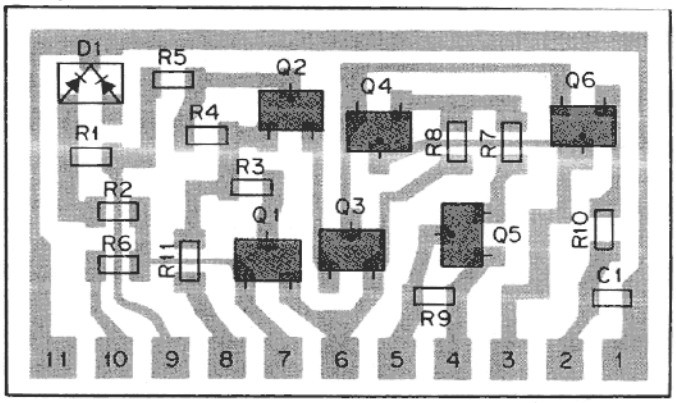


Q1,5 : 2SC2712(K) Q2,3 : 2SC3295(B) Q4,6 : 2SC2712(BL)
D1 : 1SS184

## ALERT, VACANT-CH UNIT (X59-1020-10)
**Component side view**

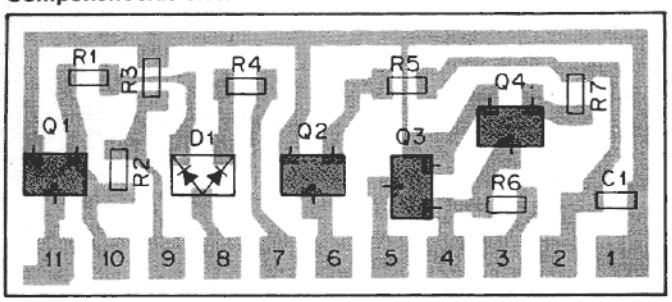


Q1 : 2SC3326(A) Q2 –4 : 2SC2712(Y)
D1 : 1SS181

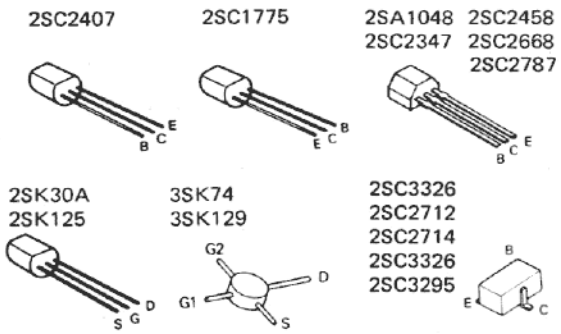


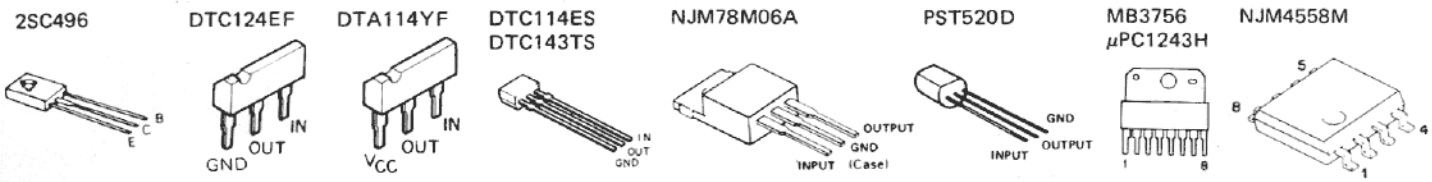

## COMPOUND UNIT (X60-1290-10) Component side view

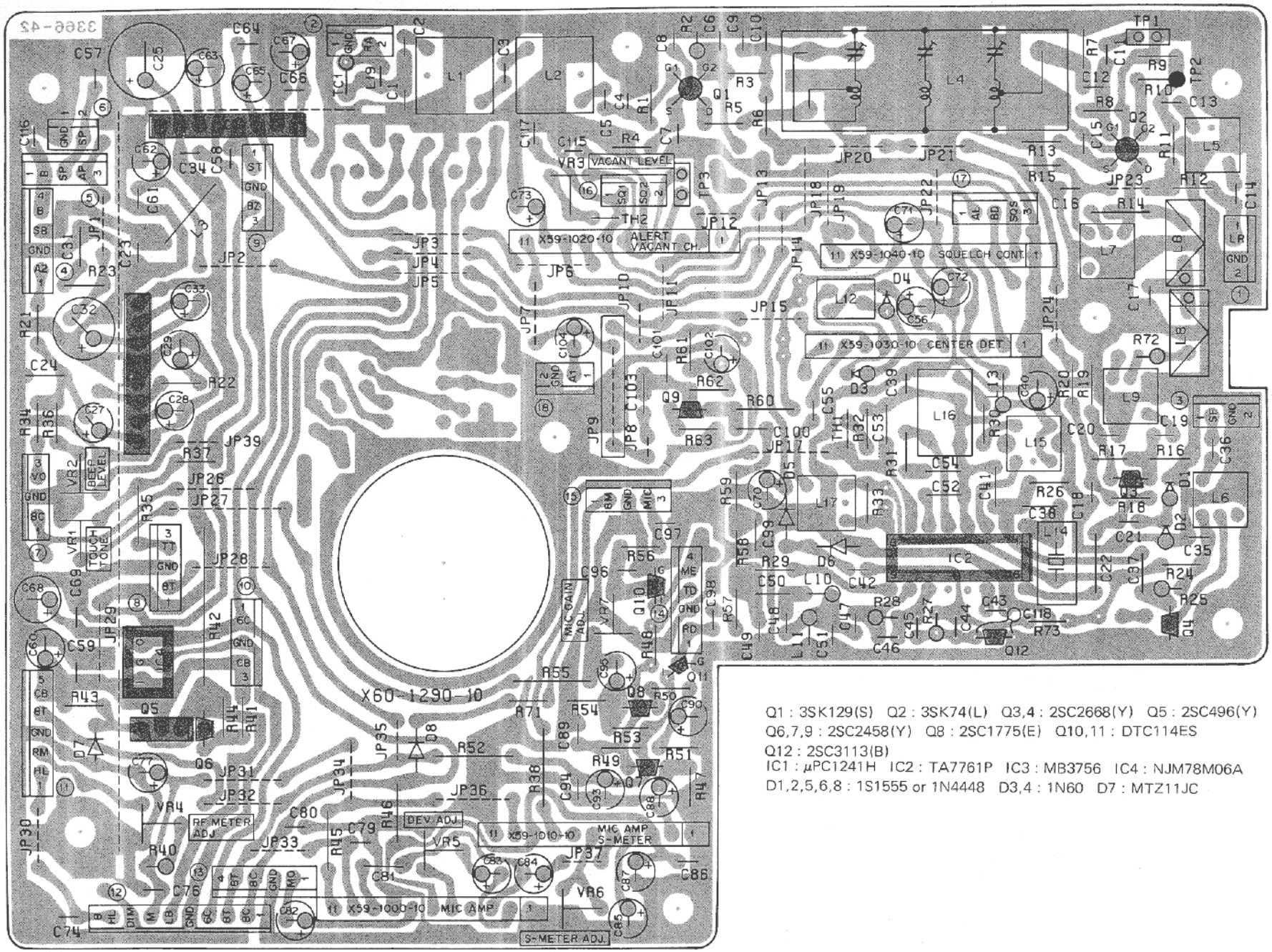


Q1 : 3SK129(S) Q2 : 3SK74(L) Q3,4 : 2SC2668(Y) Q5 : 2SC496(Y)
Q6,7,9 : 2SC2458(Y) Q8 : 2SC1775(E) Q10,11 : DTC114ES
Q12 : 2SC3113(B)
IC1 : μPC1241H IC2 : TA7761P IC3 : MB3756 IC4 : NJM78M06A
D1,2,5,6,8 : 1S1555 or 1N4448 D3,4 : 1N60 D7 : MTZ11JC

PLL

34-2

## PLL UNIT (X50-2040-10) Component side view

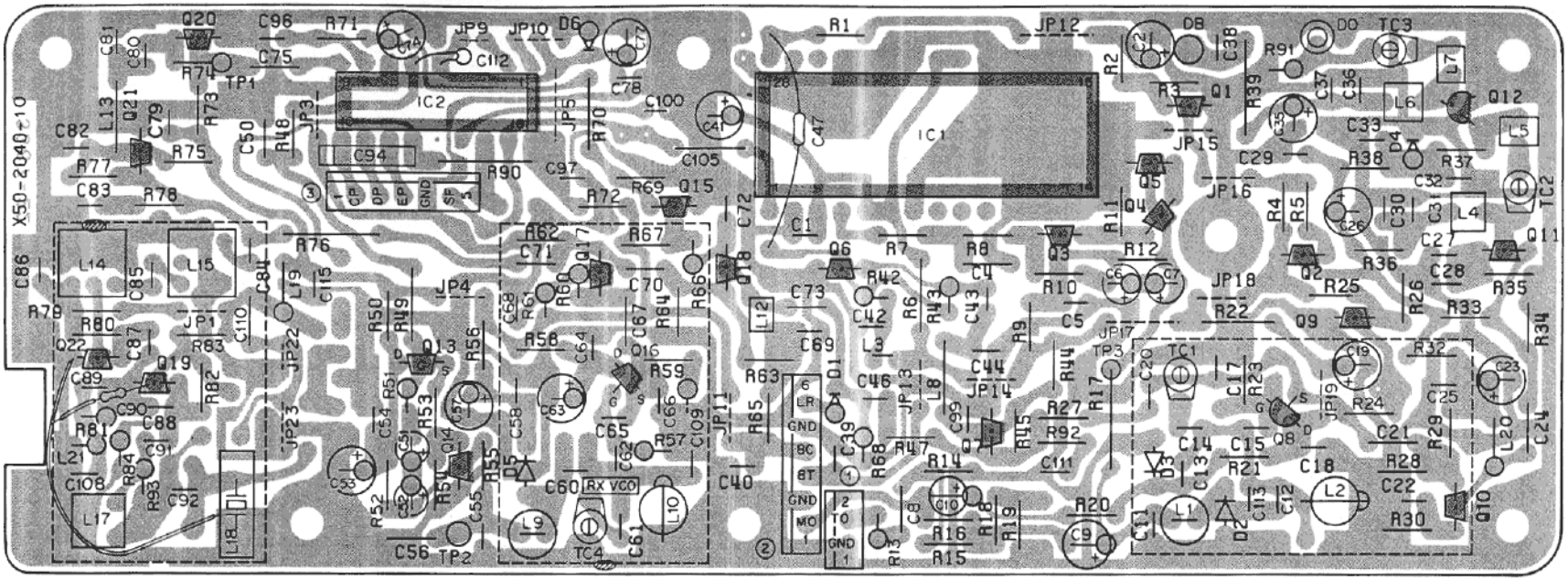


Q1,9,14,15 : 2SC2458(Y) Q2 : 2SA1047(Y) Q3–5 : 2SC1775(E) Q6,7,10,17,18,20–22 : 2SC2668(Y) Q8,16 : 2SK125 Q11 : 2SC2347
Q12 : 2SC2407(I) Q13 : 2SK30A(O) Q19 : 2SC2787(L)
IC1 : MC145151P*J IC2 : MC145155P*K
D1,4 : 1S1555 D2,3,5 : 1S2208 D6 : MTZ6.2JA

## CONTROL UNIT (X53-1440-11) Component side view

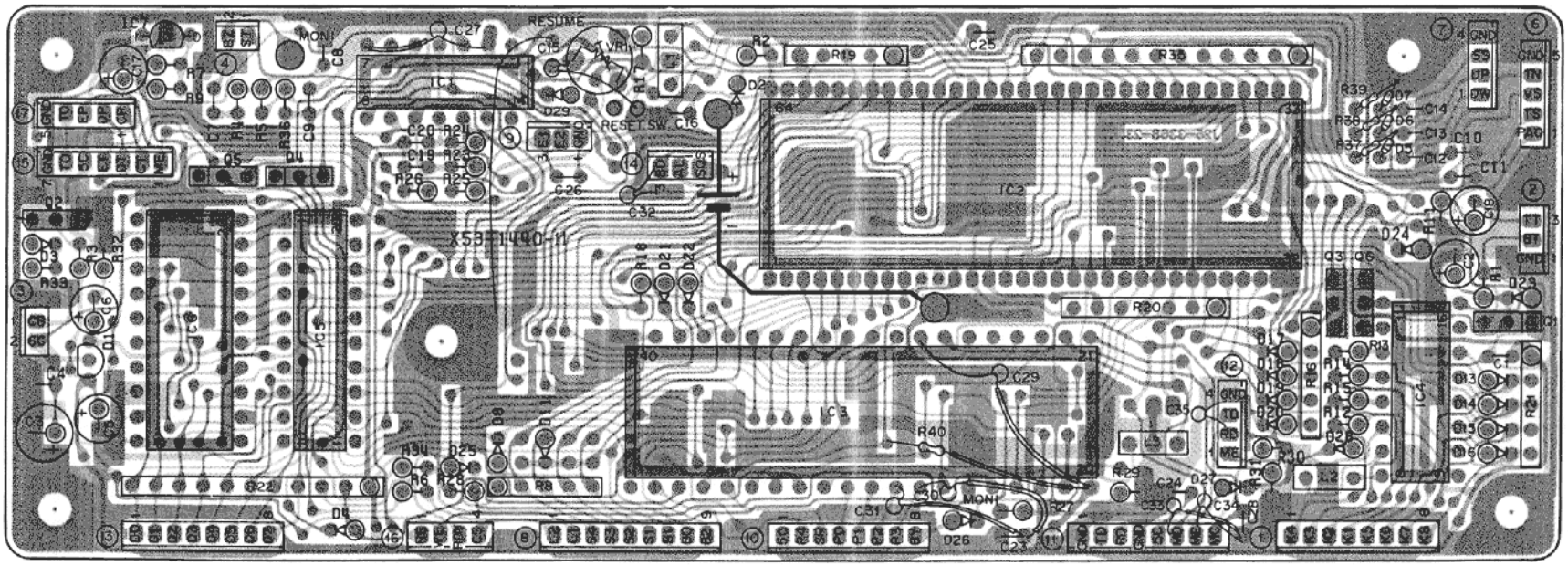


Q1 : DTC124EF Q2 : 2SC2458(Y) Q3–5 : DTA114YF Q6 : DTC143TS
IC1 : MC14584BCP IC2 : TMP47C46N-9044 IC3 : μPD7508HC-056 IC4 : LR4087 IC5 : TC40H374P IC6 : TC5047AP-1 IC7 : PST520D
D1 : MC811 D2,4–8,11,13–22,24,27,28 : 1S1555 or 1N4448 D3 : MTZ7.5JA D23 : MTZ5.6JC D25,26 : 1SS106 D29 : 1S133

## DISPLAY UNIT (X54-1860-11) Component side view

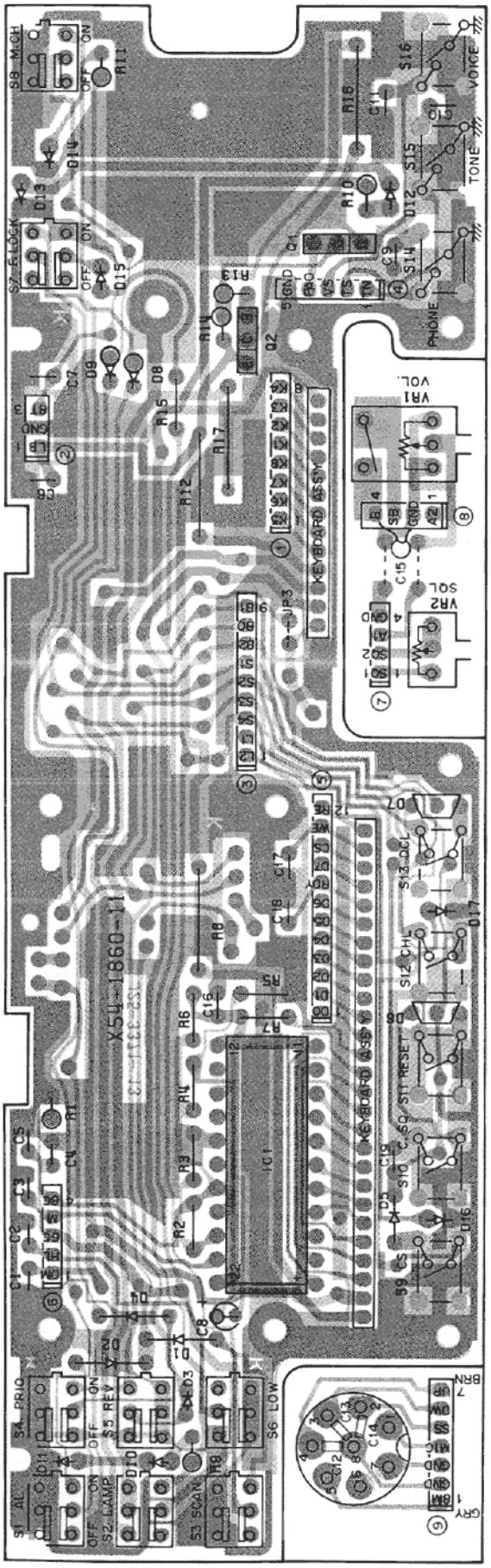


## DISPLAY UNIT (X54-1860-11) Foil side view

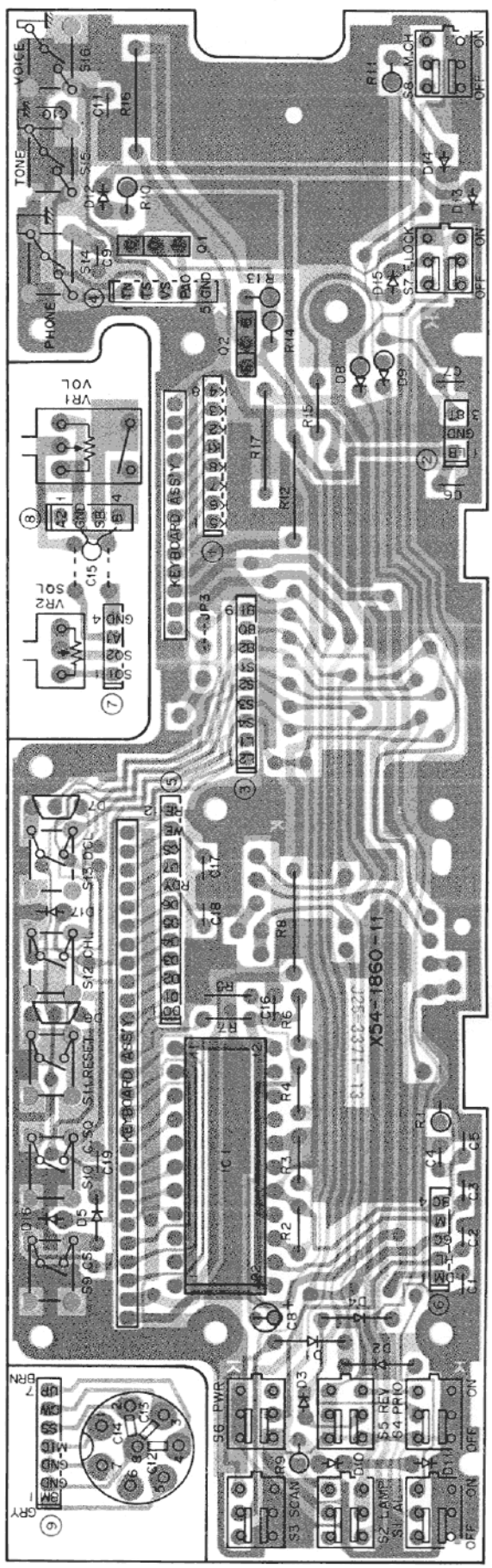


Q1 : DTC124EF Q2 : 2SA790(A,B)
IC1 : IR2429
D1–5,8,9 : 1S1555 or 1N4448 D6,7 : MC921 D10–13 : LN38GPL D14 : LN222RP D15 : LN322GP D16,17 : LN442YP

### FINAL UNIT (X45-1460-10) Component side view

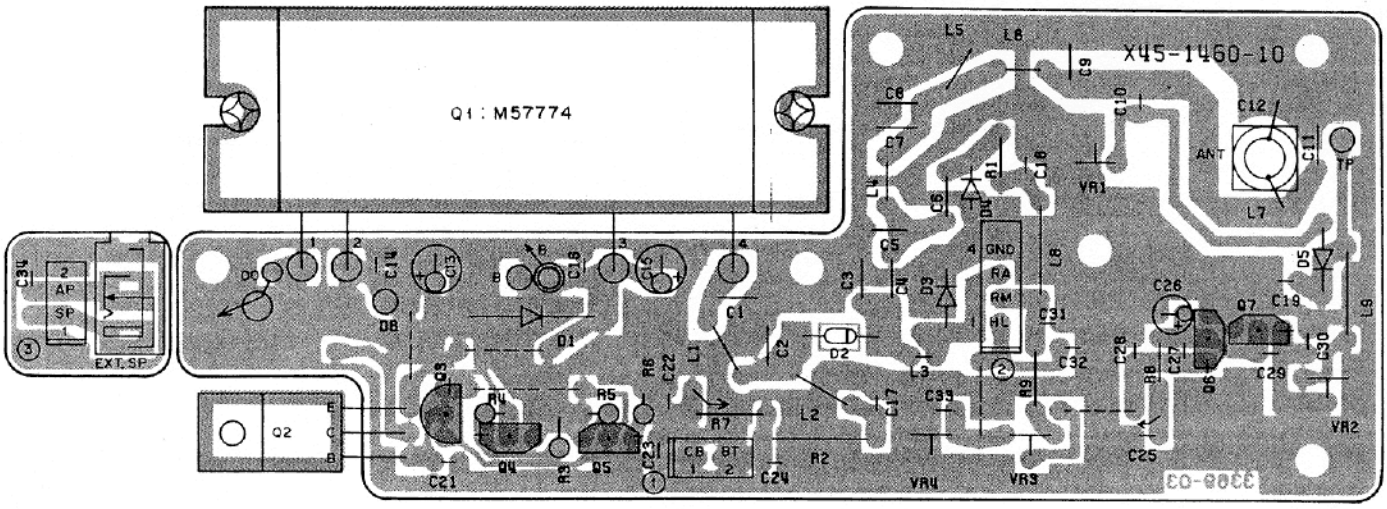


Q1 : M57774 Q2 : 2SD1406(Y) Q3 : 2SA1015(Y) Q4–7 : 2SC2458(Y)
D1 : U15B D2 : MI407 D3 : MI308 D4,5 : 1S1587

2SA1015

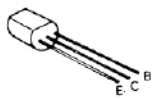


2SD1406

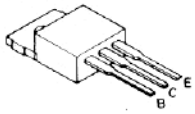


2SA790

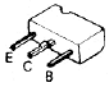


2SC2458

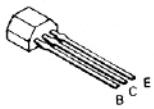


DTC124EF

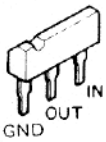


## TERMINAL FUNCTION

| Terminal name | Terminal function |
|---|---|
| AL | ALERT |
| AP | Audio Power Output |
| A1 | AF Output |
| A2 | AF Input |
| B | + 13.8V |
| BD | Busy Display |
| BZ | Buzzer |
| CB | Common + B |
| CT | Tone Clock |
| CP | PLL Clock |
| 5C | + 5V Common |
| 6C | + 6V Common |
| 8C | + 8V Common |
| DB | Drive + B |
| DT | Tone Data |
| DW | MIC Down SW |
| DP | PLL Data |
| DM | Dimmer |
| DO | Drive Out |
| ET | Tone Enable |
| EP | PLL Enable |
| E1 | Encoder 1 |
| E2 | Encoder 2 |
| HL | HI/LOW |
| G | GND |
| LB | Lamp + B |
| LR | RX Local |

| Terminal name | Terminal function |
|---|---|
| ME | Modem Enable |
| MD | Modem Data |
| MC | Modem Clock |
| M | Meter |
| MIC | MIC |
| MO | Modulator Out |
| 8M | MIC 8V |
| NC | Non Connection |
| RD | RX Data |
| RA | RX Antenna |
| RM | RF Meter |
| SF | Standard Frequency |
| ST | Stand By |
| SS | Stand By SW |
| SQS | Squelch Select |
| SQ1 | Squelch 1 |
| SQ2 | Squelch 2 |
| SP | Speaker |
| SB | Switched + B |
| TO | Tone |
| TS | Tone SW |
| TH | Tone Hi |
| TD | TX Data |
| TT | Touch Tone Signal |
| 8T | TX + 8V |
| 8C | + 8V Common |
| UP | MIC UP SW |
| VS | Voice SW |

## BLOCK DIAGRA

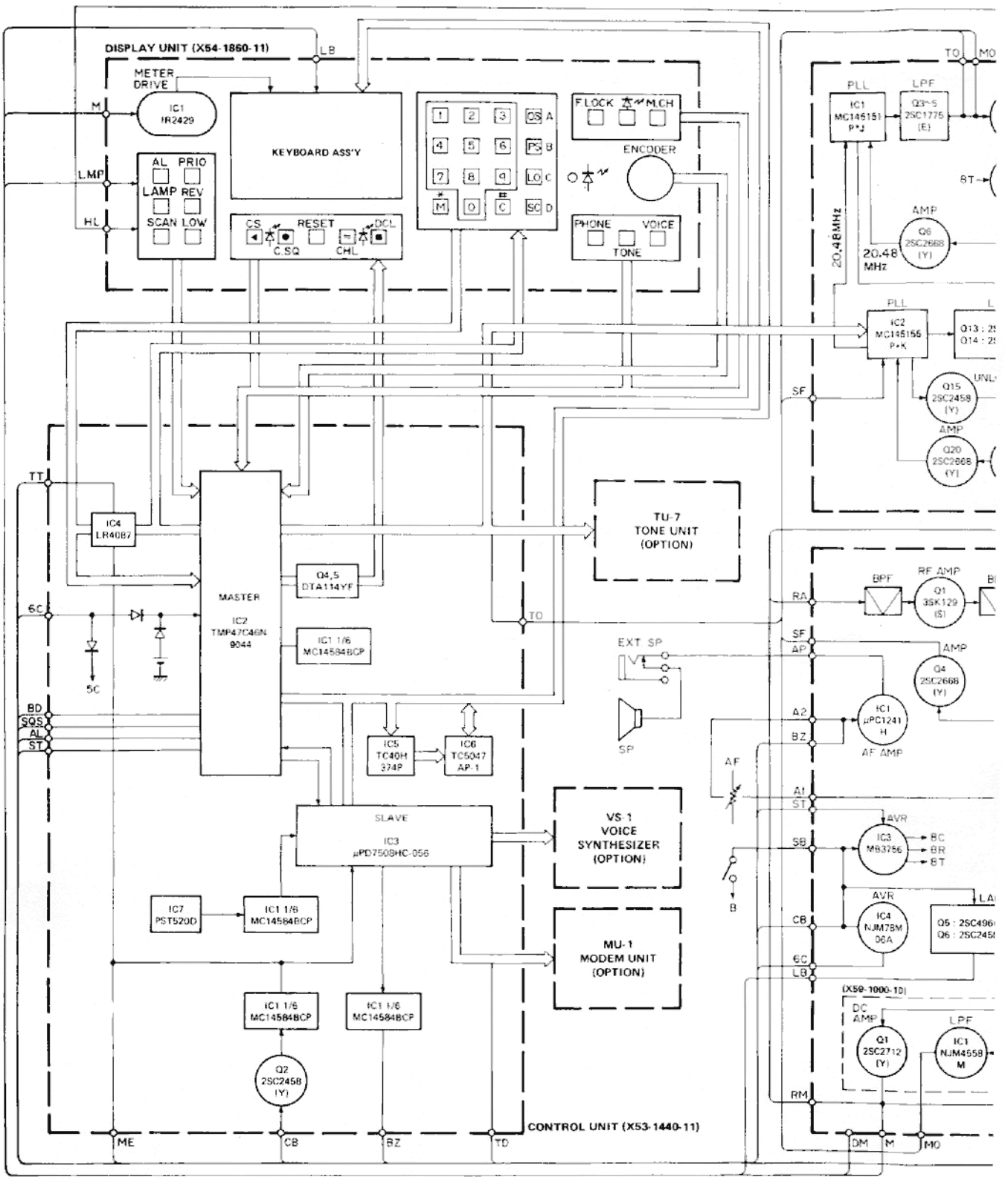

# DIAGRAM

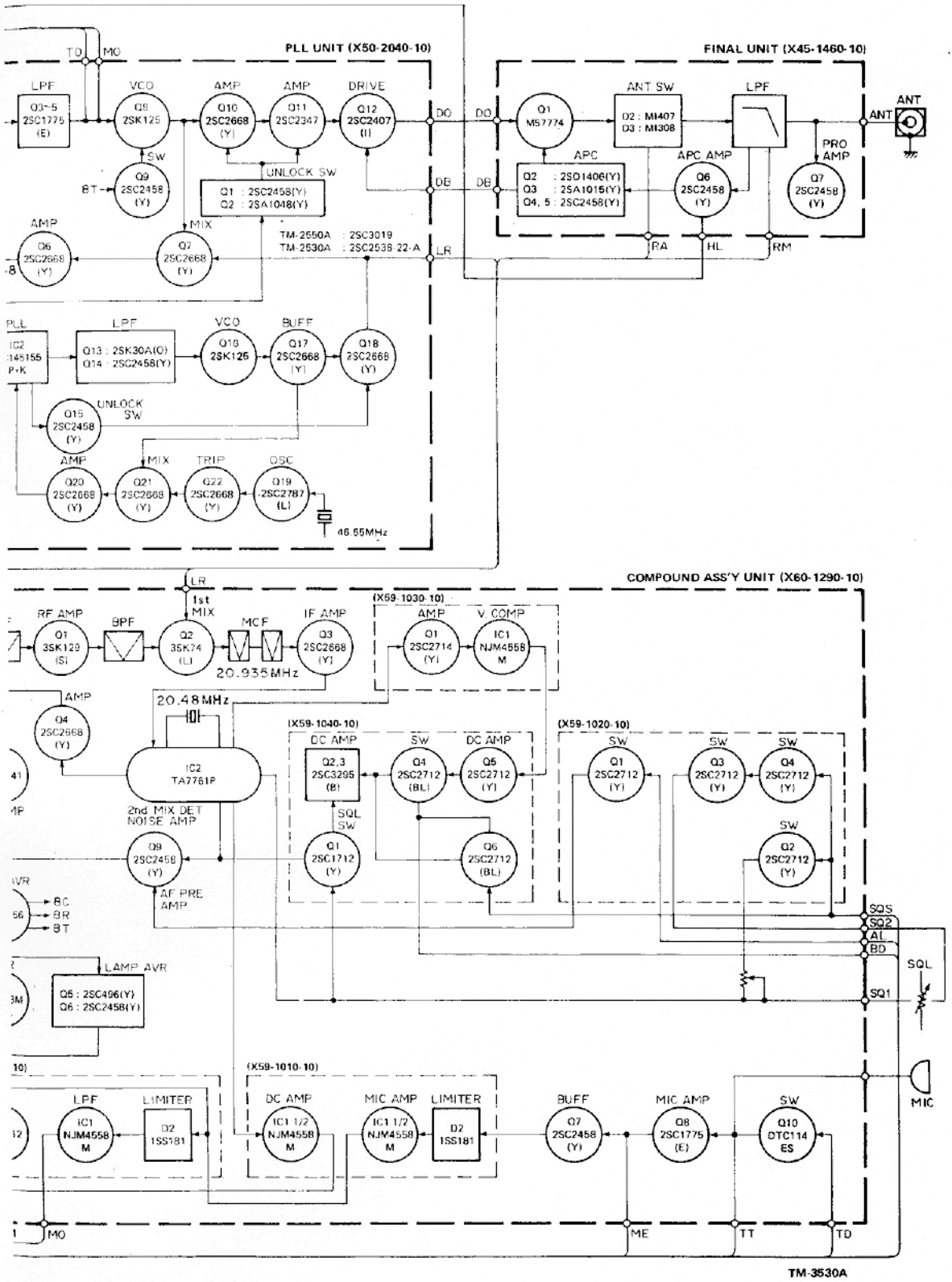


TM-3530A

Signal line — Control line — Common DC line

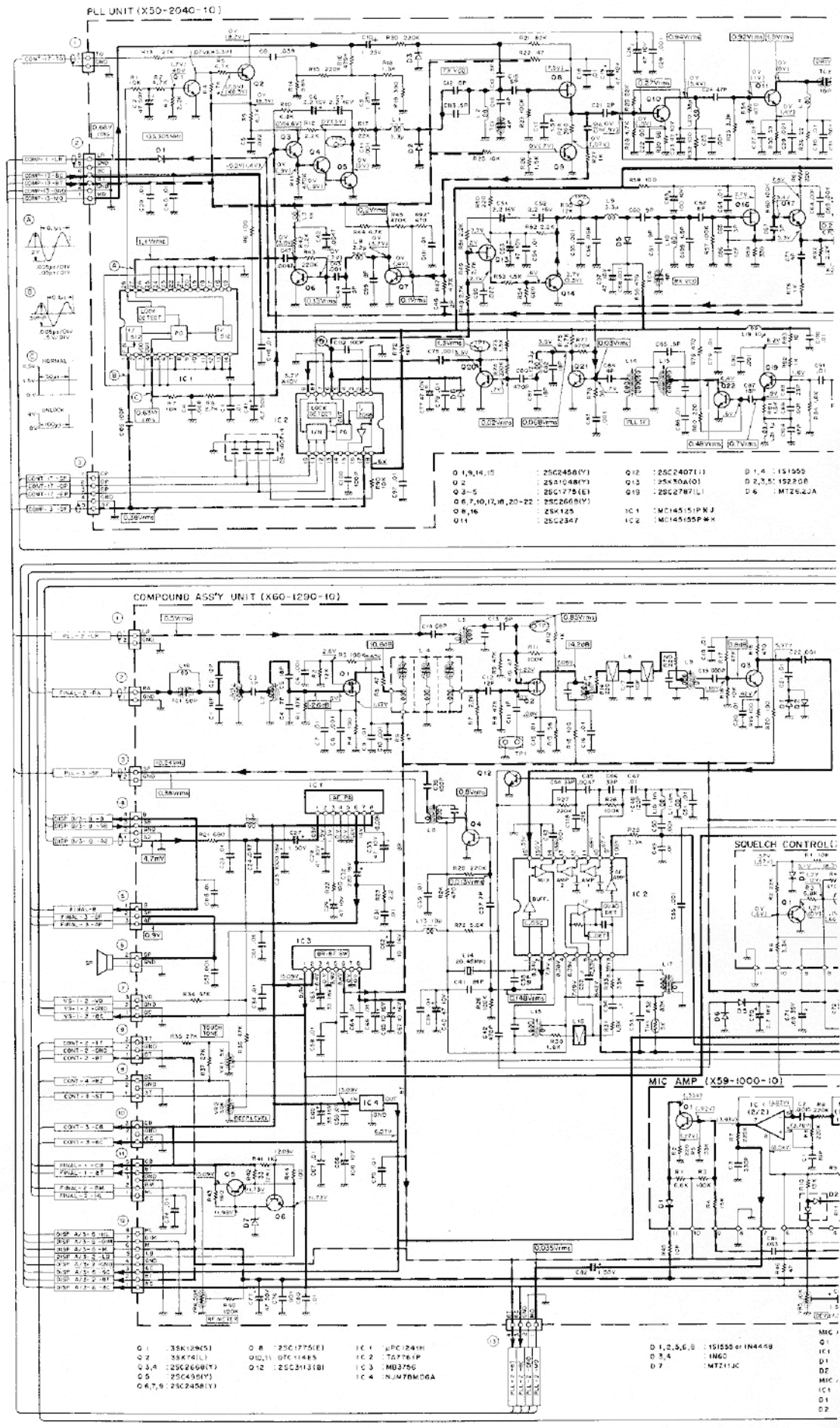


A

— — 8T,8R Line  **Voltage measurement conditions f =220.00MHz , RX no signal, (  ) : TX.**

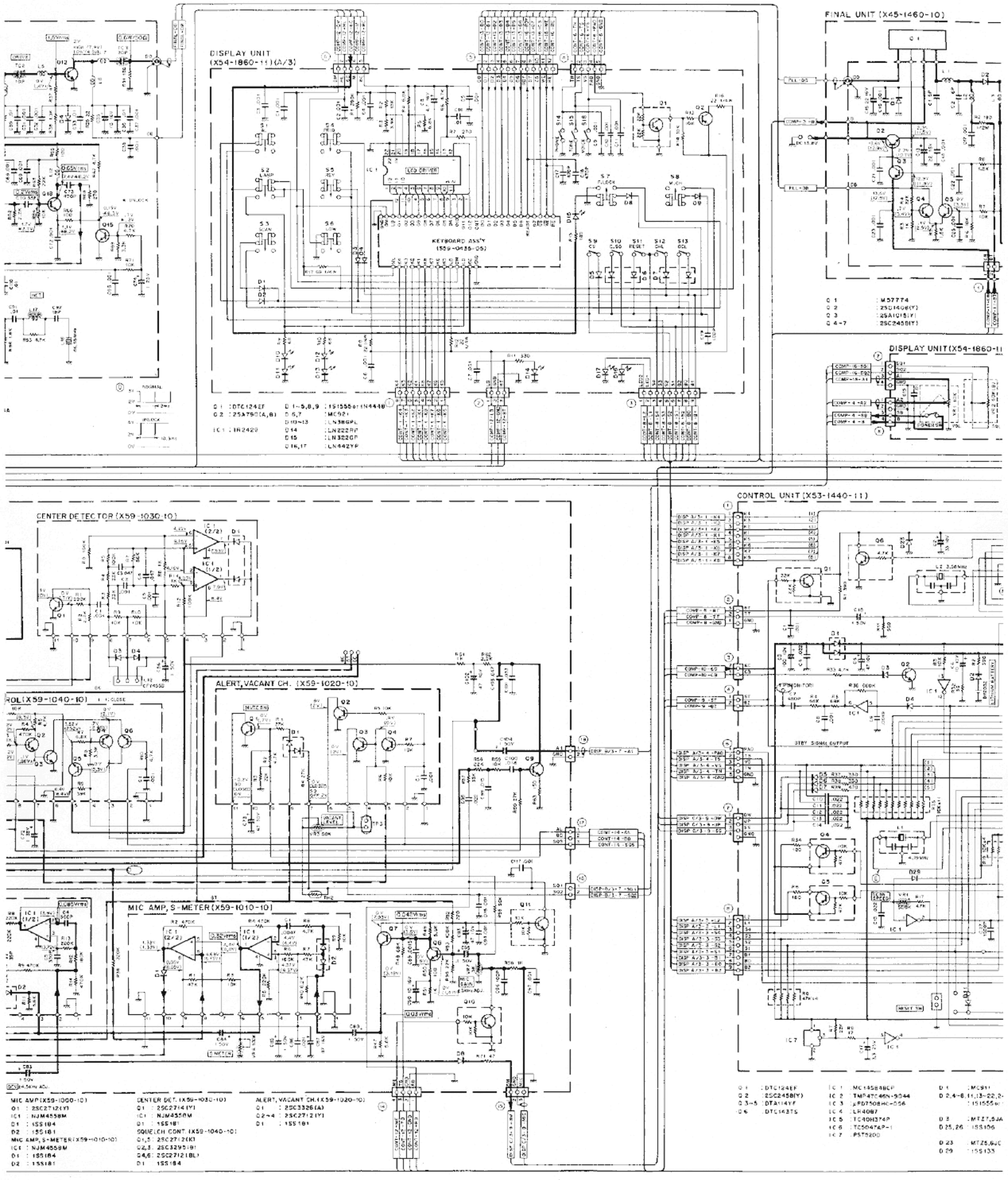


B

# SCHEMATIC DIAGRAM TM-3530A

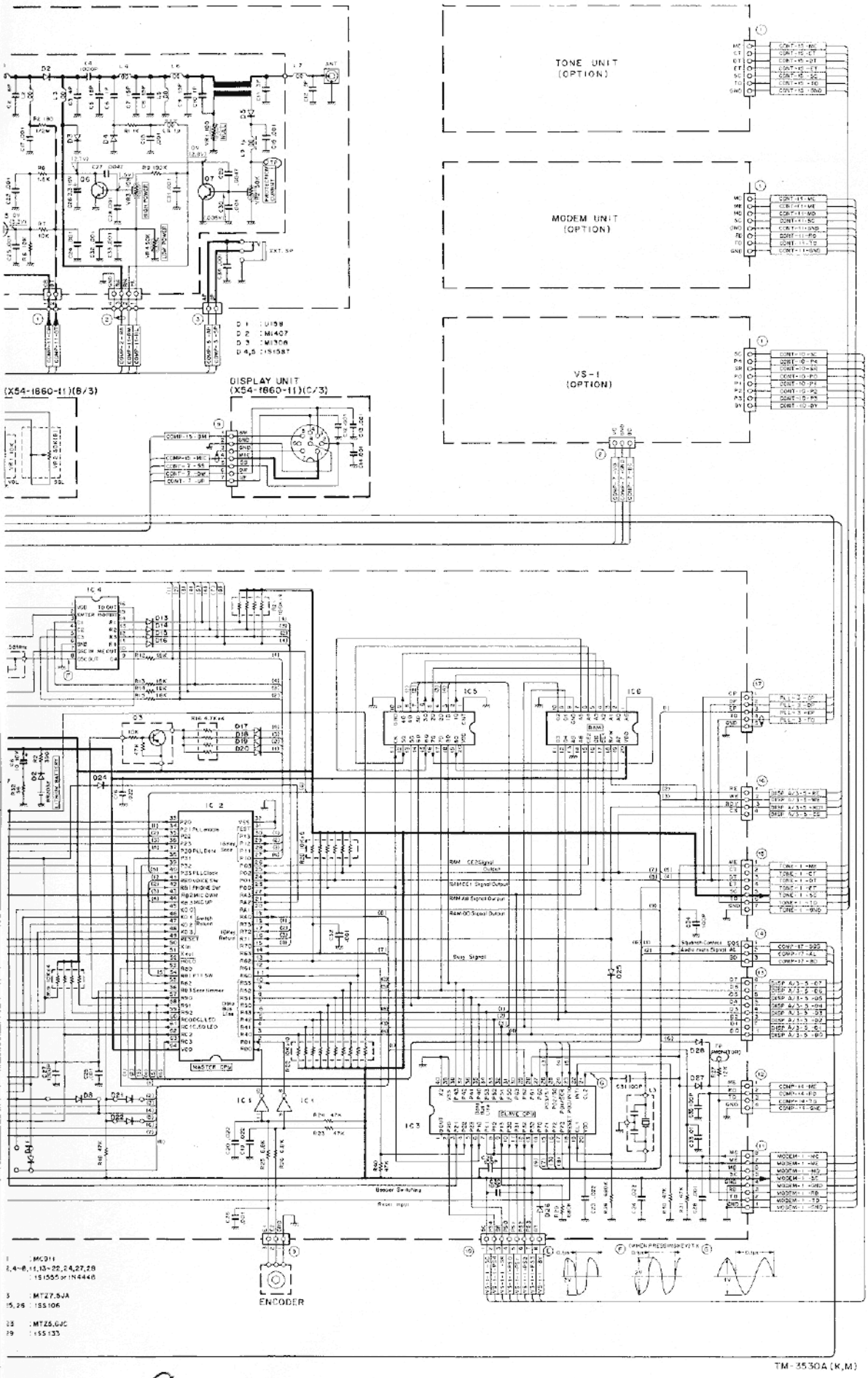

## RX SECTION

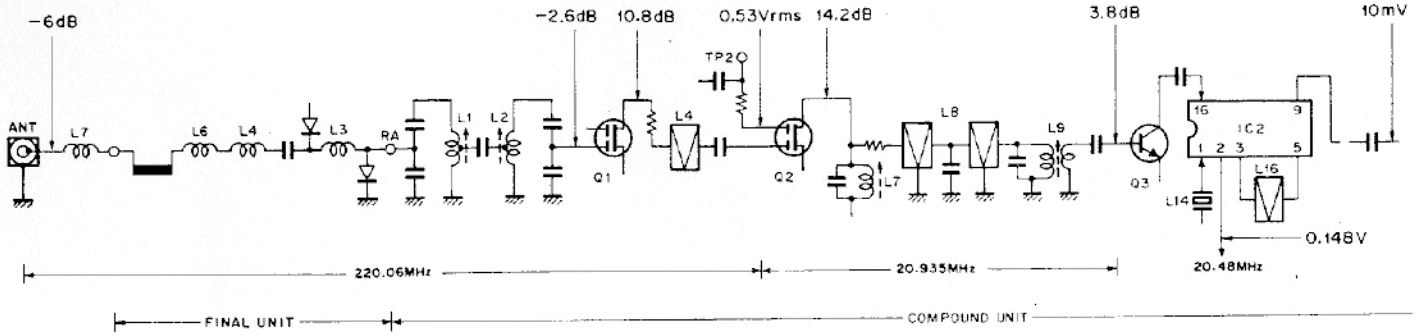


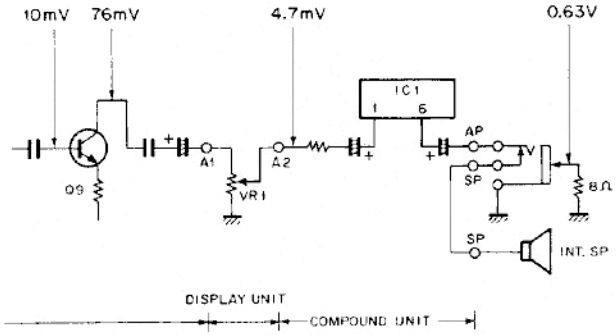


1) First, set the AF gain control for an audio output of 0.63V/8Ω for an SSG output signal at 220.06MHz/−6dBμ, applied to the antenna terminal, the AF gain control is now fixed. Thereafter, only the SSG signal level injected at each point is varied, as required to obtain the same 20dB NQ sesitivity as that at initial input of the reference −6dBμ is taken.
2) In the stages after the product delector, the AF output level is measured.
3) Level measurement is made with a 0.01μF ceramic capacitor connected to the SSG output.
FREQ. : 220.06MHz, MOD : 1kHz, DEV : 3kHz

## TX SEDTION

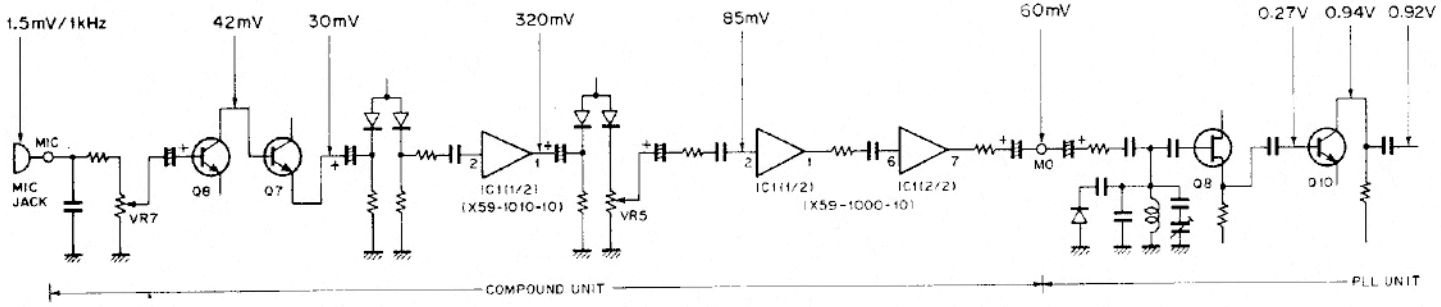


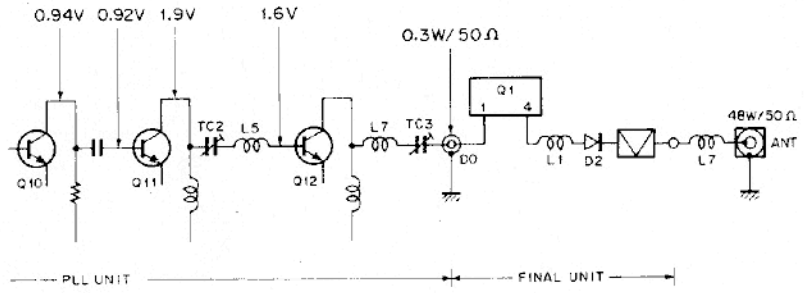


1) FREQ. : 220.06MHz
2) For level measurement before pin DO in the COMPOUND unit, coaxial cable connected to pin DO is disconnected.

# LEVEL DIAGRAM

# MU-1 (MODEM)

## MU-1 OUTSIDE VIEW

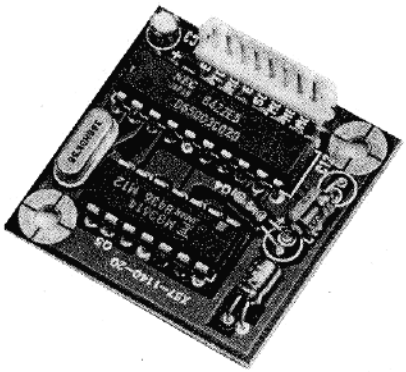

## MU-1 PC BOARD VIEW
**(X57-1140-20) Component side view**

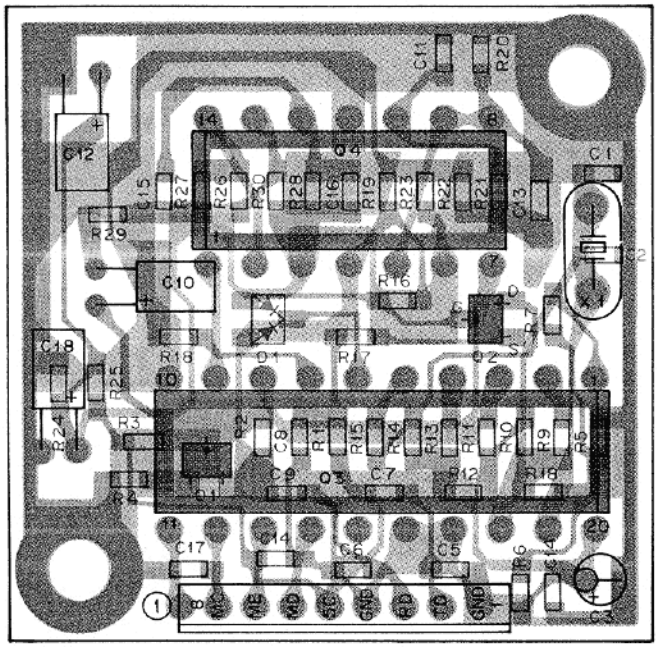

2SC2712


2SK208


## MU-1 PARTS LIST

| Part No. | Remarks | Description | Q'Ty | Ref. No. |
|---|---|---|---|---|
| | | **MU-1 (GENERAL)** | | |
| B50-8046-10 | N | Instruction manual | 1 | |
| G13-0826-04 | | Cushion | 1 | |
| H01-4680-03 | N | Carton (Inside) | 1 | |
| H25-0029-04 | | Protective bag | 2 | |
| J32-0791-04 | | Hex. head boss | 1 | |
| N35-2604-41 | | Binding screw | 2 | |
| X57-1140-20 | N | MODEM unit | 1 | |
| | | **MODEM UNIT (X57-1140-20)** | | |
| CC73FCH1H150J | | Chip cap. 15P | 2 | C1,2 |
| CE04CW0J220M | | Electro 22μ 6.3V | 1 | C18 |
| CE04CW1A100M | | Electro 10μ 10V | 2 | C3,12 |
| CE04CW1H010M | | Electro 1μ 50V | 1 | C10 |
| CK73EB1E473K | | Chip cap. 0.047μ | 1 | C13 |
| CK73FB1H102K | | Chip cap. 0.001μ | 1 | C17 |
| CK73FB1H103K | | Chip cap. 0.01μ | 1 | C8 |
| CK73FB1H223K | | Chip cap. 0.022μ | 7 | C4,7,9,11, 14–16 |
| CK73FB1H471K | | Chip cap. 470P | 2 | C5,6 |
| E40-5022-05 | | Mini-connector 8P | 1 | - |
| L77-1295-05 | N | X'tal oscillator 3.6864MHz | 1 | X1 |
| RK73FB2A101J | | Chip res. 100Ω | 1 | R17 |
| RK73FB2A102J | | Chip res. 1kΩ | 1 | R1 |
| RK73FB2A103J | | Chip res. 10kΩ | 7 | R8,10,12,14, 18,23,30 |
| RK73FB2A105J | | Chip res. 1MΩ | 1 | R16 |
| RK73FB2A183J | | Chip res. 18kΩ | 5 | R7,9,11,13,15 |
| RK73FB2A221J | | Chip res. 220Ω | 1 | R4 |
| RK73FB2A223J | | Chip res. 22kΩ | 1 | R26 |
| RK73FB2A393J | | Chip res. 39kΩ | 2 | R5,6 |
| RK73FB2A394J | | Chip res. 390kΩ | 1 | R2 |
| RK73FB2A472J | | Chip res. 4.7kΩ | 4 | R3,20,24,25 |
| RK73FB2A682J | | Chip res. 6.8kΩ | 5 | R21,22,27–29 |
| RK73FB2A683J | | Chip res. 68kΩ | 1 | R19 |
| 2SC2712(Y) | | Chip TR | 1 | Q1 |
| 2SK208(Y) | | Chip FET | 1 | Q2 |
| μPD65003C-020 | | IC | 1 | Q3 |
| MB3614 | | IC | 1 | Q4 |
| DAN202(K) | | Chip diode | 1 | D1 |

## MU-1 BLOCK DIAGRAM

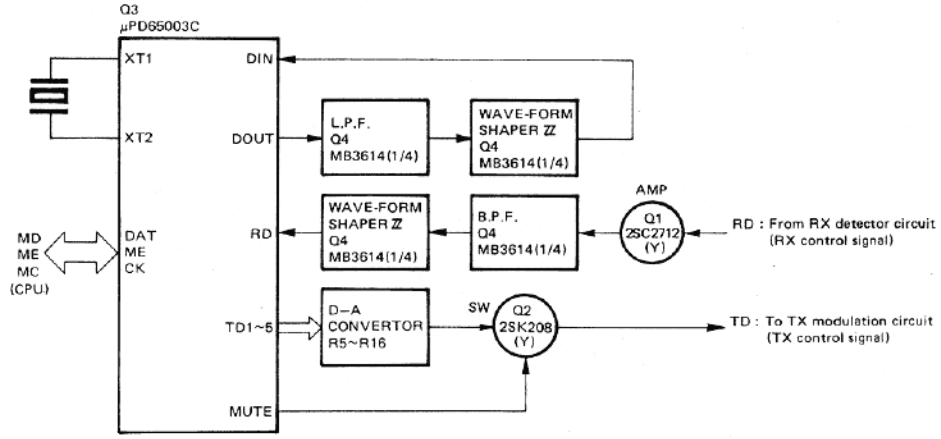


FINAL UNIT

PLL UNIT

# MU-1 (MODEM)/MB-10 (MOBILE MOUNT)

## MU-1 SCHEMATIC DIAGRAM

(X57-1140-20)

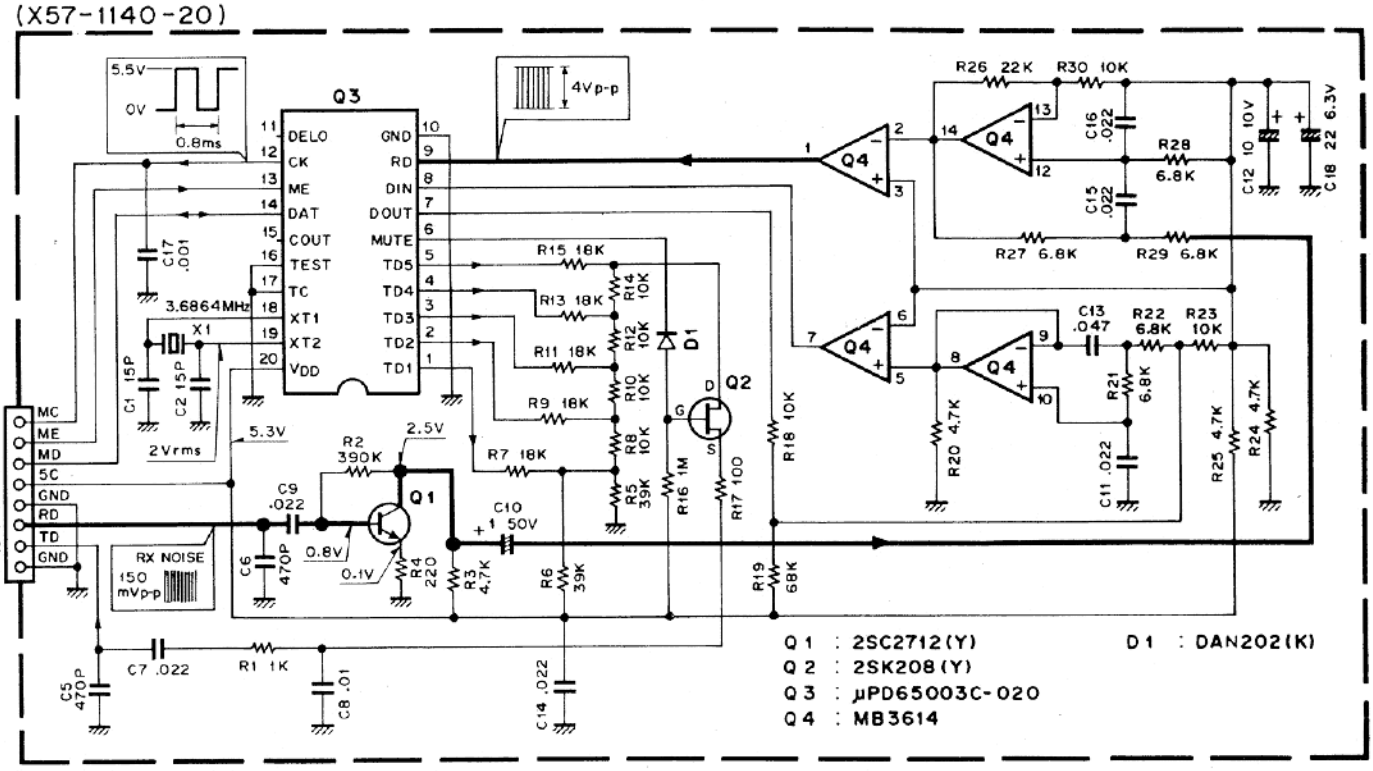


- **Modulation output (TD terminal output on MODEM unit)**

| Condition | | TD terminal output | |
|---|---|---|---|
| ME | MD | Frequency (Hz) | Output voltage (V) |
| 5V | 5V | 1.200 | 1.3 ± 0.15 |
| 5V | 0V | 1.800 | 1.1 ± 0.15 |

- **Demodulation output**

Operation condition (RD terminal) : 40mV±3dB
(Confirm DAT terminal voltage by receiving a 60dBμ signal from SSG)

| SSG MOD. frequency | DAT terminal voltage |
|---|---|
| 1.200Hz | 5V |
| 1.800Hz | 0V |

## MB-10 OUTSIDE VIEW

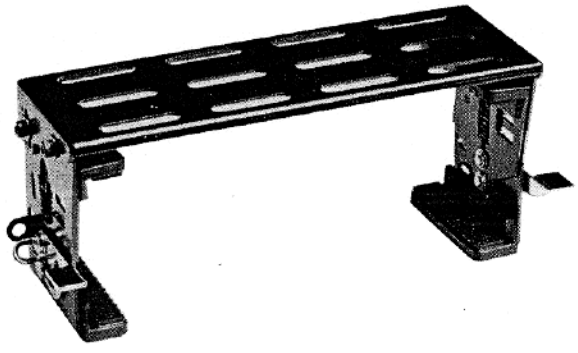

## MB-10 PARTS LIST

| Part No. | Re-marks | Description | Q'Ty | Ref. No. |
|---|---|---|---|---|
| A13-0666-02 | N | Mount blacket ass'y | 1 | |
| A13-0667-02 | N | Mount blacket ass'y | 1 | |
| A13-0668-04 | N | Mount hardware | 1 | |
| B50-8063-00 | N | Instruction manual | 1 | |
| G13-0823-04 | | Cushion | 4 | |
| H01-8006-03 | N | Carton (Inside) | 1 | |
| H13-0803-03 | N | Protective plate | 1 | |
| H13-0805-03 | N | Protective plate | 1 | |
| H25-0029-04) | | Protective bag (Screw etc.) | 1 | |
| H25-0036-04 | | Protective bag (Angle ass'y) | 2 | |
| H25-0116-04) | | Protective bag (Accessary) | 1 | |
| N09-0008-04 | | Hex. head screw (Accessary) | 4 | |
| N09-0632-05 | | Taptite screw (A) (Accessary) | 4 | |
| N14-0510-04 | | Flange nut (Accessary) | 4 | |
| N15-1040-45 | | Flat washer (Accessary) | 4 | |
| N15-1060-46 | | Flat washer (Accessary) | 4 | |
| N16-0060-46 | | Spring washer (Accessary) | 4 | |
| N99-0304-04 | | Hex. hole screw (Accessary) | 4 | |
| W01-0401-05 | | Hex. wrench (Accessary) | 1 | |

# TU-7 (TONE)

## TU-7 OUTSIDE VIEW

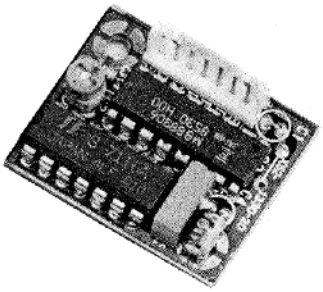

## TU-7 PC BOARD VIEW

**(X52-1330-20) Component side view**

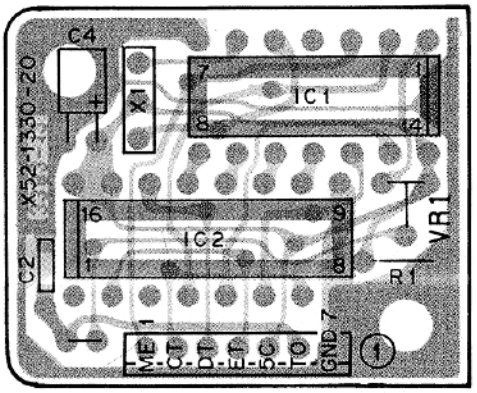


## TU-7 PARTS LIST

| Part No. | Re-marks | Description | Q'Ty | Ref. No. |
|---|---|---|---|---|
| **TU-7 (GENERAL)** | | | | |
| B50-8045-00 | N | Instruction manual | 1 | |
| E31-3150-05 | N | Cable assembly | 1 | |
| G13-0826-04 | N | Cushion | 1 | |
| G31-0826-04 | | Foam spacer | 1 | |
| H01-4679-03 | N | Carton (Inside) | 1 | |
| H25-0029-04 | | Protective bag | 2 | |
| J32-0791-04 | N | Hex. head boss | 1 | |
| N35-2604-41 | | Binding screw | 2 | |
| X52-1330-20 | N | Tone unit | 1 | |
| **TONE UNIT (X52-1330-20)** | | | | |
| CE04CW1A100M | | Electro 10μ 10V | 1 | C4 |
| CK73EB1H473K | | Chip cap. 0.047μ | 1 | C2 |
| C91-0757-05 | | Ceramic 0.001μ | 1 | C3 |
| E40-5021-05 | | Mini-connector 7P | 1 | |
| L78-0018-05 | N | Ceramic oscillator | 1 | X1 |
| R12-3445-05 | | Trimming pot. 47kΩ | 1 | VR1 |
| MB88306 | N | IC | 1 | IC2 |
| S7116A | N | IC | 1 | IC1 |

## TU-7 INSTALLATION AND TONE FREQUENCY SETTING PROCEDURE

Available CTSS tone frequencies

| Hz | Hz | Hz |
|---|---|---|
| 67.0 | 114.8 | 192.8 |
| 71.9 | 118.8 | 203.5 |
| 74.4 | 123.0 | 210.7 |
| 77.0 | 127.3 | 218.1 |
| 79.7 | 131.8 | 225.7 |
| 82.5 | 136.5 | 233.6 |
| 85.4 | 141.3 | 241.8 |
| 88.5 | 146.2 | 250.3 |
| 91.5 | 151.4 | |
| 94.8 | 156.7 | |
| 97.4 | 162.2 | |
| 100.0 | 167.9 | |
| 103.5 | 173.8 | |
| 107.2 | 179.9 | |
| 110.9 | 186.2 | |

Refer to the instruction manual provided with the transceiver.

# TU-7 (TONE)/PG-2K (DC POWER CABLE)

## TU-7 SCHEMATIC DIAGRAM

(X52-1330-20)

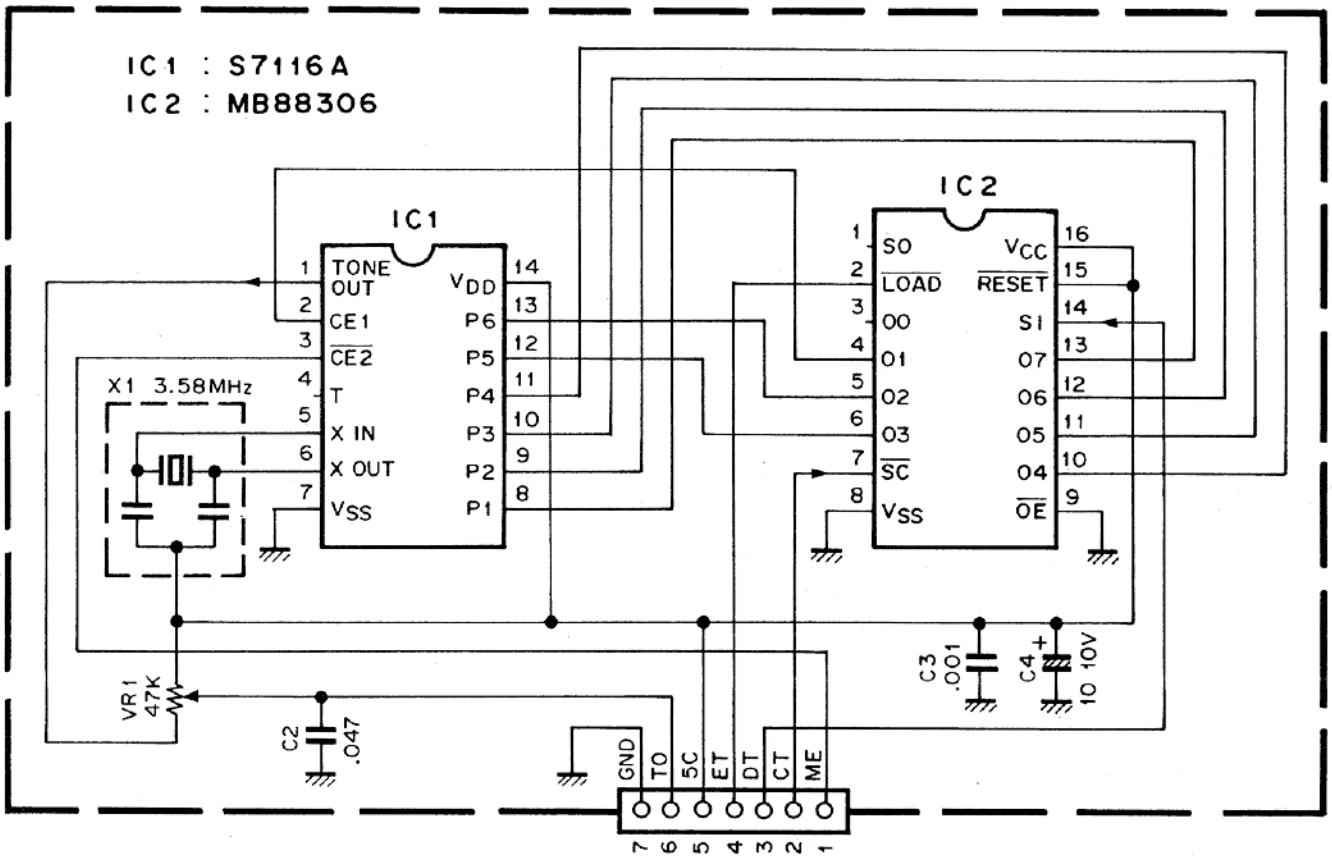


## PG-2K OUTSIDE VIEW

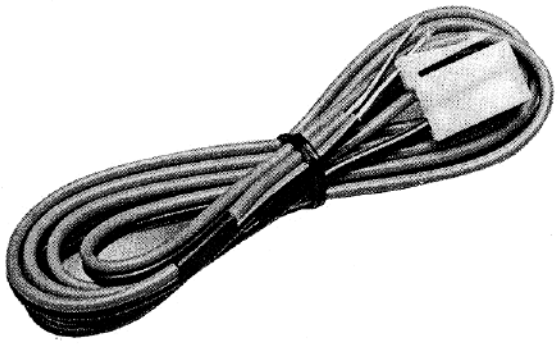

# VS-1 (VOICE SYNTHESIZER)

## PARTS LIST

| Part No. | Remarks | Description | Ref. No. |
|---|---|---|---|
| B50-4035-00 | N | Instruction manual | |
| CC45SL1H121J | | C 120P x 2 | C2,3 |
| CE04W1A470M | | E 47 10V | C1,14,15 |
| CE04W1C100M | | E 10 16V | C11 |
| CE04W1HR22M | | E 0.22 50V | C12 |
| CK45B1H221K | | C 220P x 2 | C7,10 |
| CQ92M1H332K | | ML 0.0033 x 3 | C6,8,9 |
| CS15E1E010M | | T 1 25V | C4 |
| CS15E1V0R1M | | T 0.1 35V | C5 |
| C91-0131-05 | | C 0.01 (SP) | C13 |
| E40-0273-05 | △ | Mini connector 2P M | |
| E40-0373-05 | △ | Mini connector 3P M | |
| E40-0373-05 | △ | Mini connector x 2 3P T | |
| E40-0873-05 | △ | Mini connector 8P | |
| H01-4481-03 | N△ | Packing carton (inside) M | |
| H01-4501-03 | N△ | Packing carton (inside) T | |
| H25-0029-04 | | Protective bag x 2 | |
| L78-0006-05 | N | Ceramic OSC | X1 |
| N89-3006-46 | | Tapping screw x 4 | |
| R12-4408-05 | | Trim. pot. 50kΩ | VR1 |
| S31-1411-05 | N | Slide switch | S1 |
| AN6562 | N | IC | IC2 |
| MN6401TRA | N | IC | IC1 |
| TC40107BP | N | IC | IC3 |

## SCHEMATIC DIAGRAM

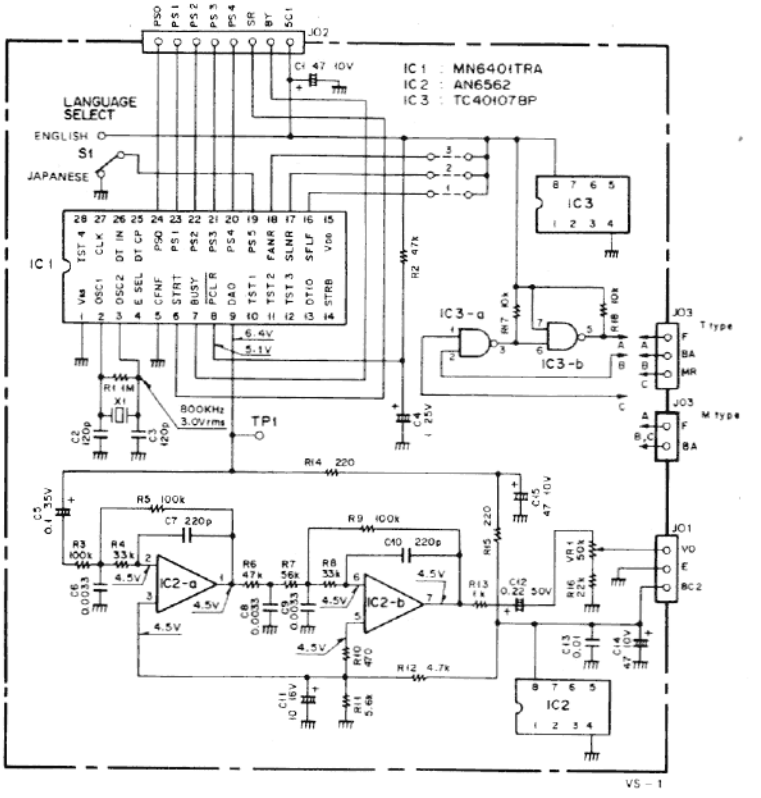


## PC BOARD VIEW

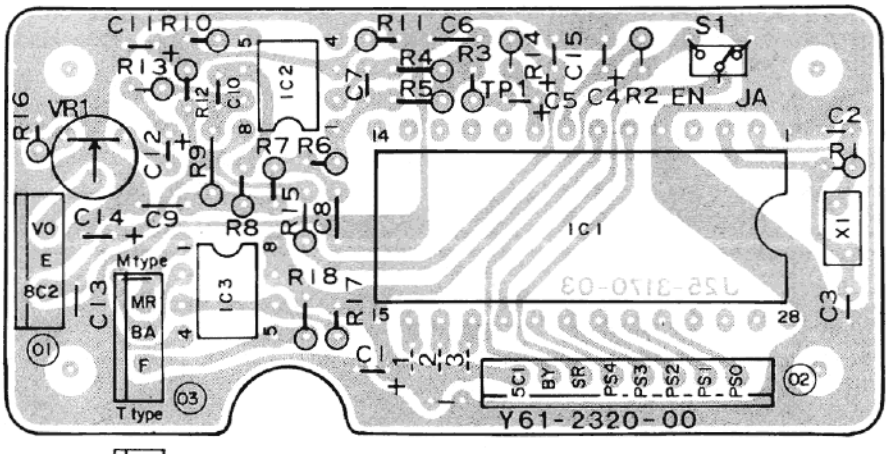

# PACKING

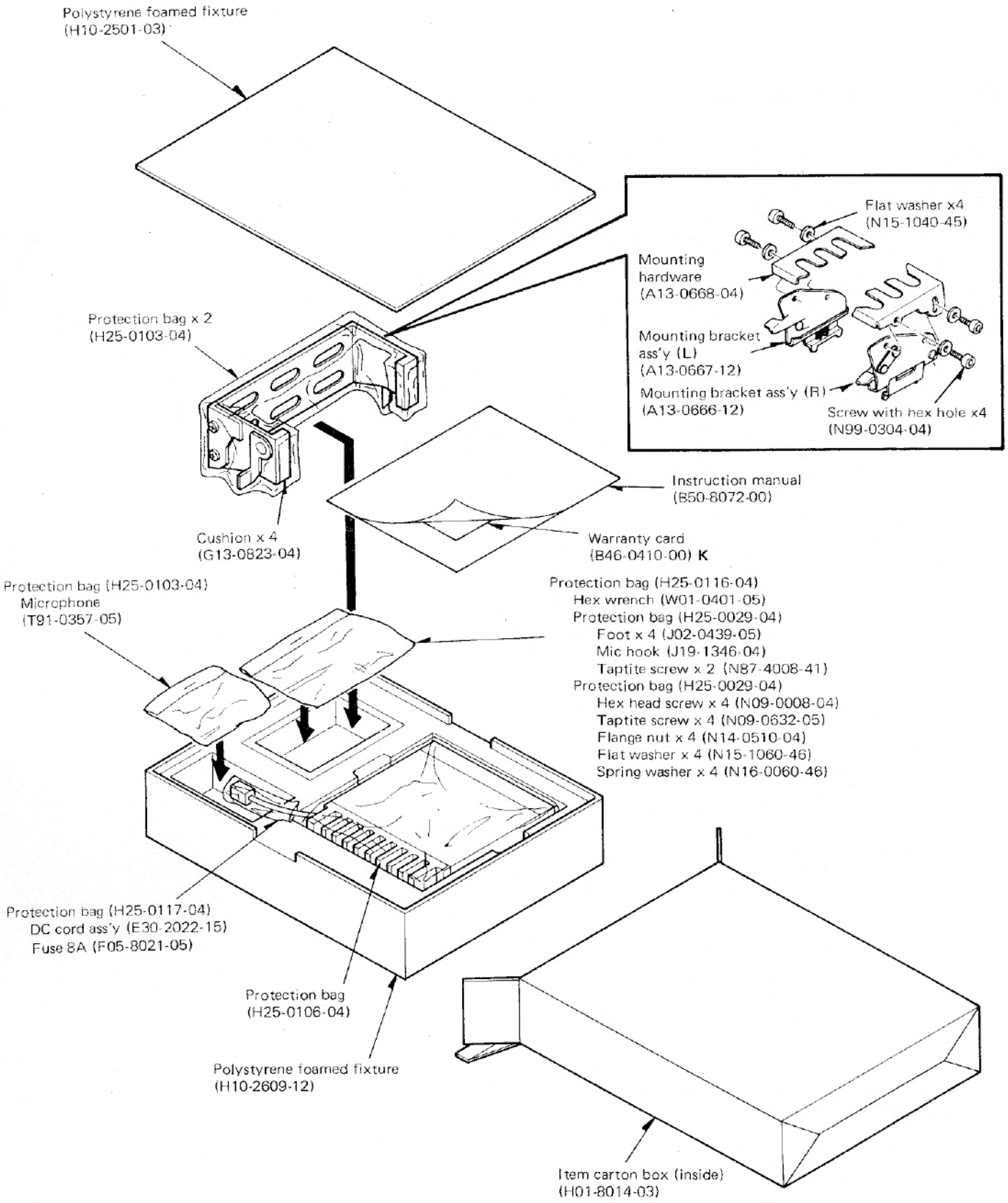
Polystyrene foamed fixture
(H10-2501-03)
Flat washer x4
(N15-1040-45)
Mounting
hardware
(A13-0668-04)
Mounting bracket
ass'y (L)
(A13-0667-12)
Mounting bracket ass'y (R)
(A13-0666-12)
Screw with hex hole x4
(N99-0304-04)
Protection bag x 2
(H25-0103-04)
Instruction manual
(B50-8072-00)
Cushion x 4
(G13-0823-04)
Warranty card
(B46-0410-00) K
Protection bag (H25-0103-04)
Microphone
(T91-0357-05)
Protection bag (H25-0116-04)
Hex wrench (W01-0401-05)
Protection bag (H25-0029-04)
Foot x 4 (J02-0439-05)
Mic hook (J19-1346-04)
Taptite screw x 2 (N87-4008-41)
Protection bag (H25-0029-04)
Hex head screw x 4 (N09-0008-04)
Taptite screw x 4 (N09-0632-05)
Flange nut x 4 (N14-0510-04)
Flat washer x 4 (N15-1060-46)
Spring washer x 4 (N16-0060-46)
Protection bag (H25-0117-04)
DC cord ass'y (E30-2022-15)
Fuse 8A (F05-8021-05)
Protection bag
(H25-0106-04)
Polystyrene foamed fixture
(H10-2609-12)
Item carton box (inside)
(H01-8014-03)

# SPECIFICATIONS

**[General]**

| | |
|---|---|
| **Frequency range** | 220 MHz to 225 MHz |
| **Mode** | FM F3 (F3E), F2 (F2D) (Control signal for DCL system) |
| **Antenna impedance** | 50 ohms |
| **Power requirement** | 13.8 VDC ± 15% |
| **Grounding** | Negative |
| **Operating temperature** | −20°C to +50°C (−4°F to +122°F) |
| **Current drain** | 0.6 A in receive mode with no input signal (TM-3530A)<br>Approx. 6.5A in HI transmit mode<br>Approx. 2.5A in LOW transmit mode |
| **Dimensions** | 180 mm wide, 60 mm high<br>195 mm deep (TM-3530A)<br>(Projection not included) |
| **Weight** | 1.8 kg (4 lbs) : TM-3530A |

**[Transmitter]**

| | |
|---|---|
| **Output power (at 13.8 VDC, 50 ohms load)** | HI: 25 W min. TM-3530A<br>LOW: 5 W approx.<br>(Adjustable up to out 20 W ..... TM-3530A)<br>**Note:**<br>Recommended duty cycle<br>1 minute : Transmission<br>3 minutes : Reception |
| **Modulation** | Reactance |
| **Frequency stability** | Less than ± 15 PPM |
| **Spurious radiation** | Less than −60 dB |
| **Maximum frequency deviation** | ± 5 kHz |
| **Audio distortion (at 60% modulation)** | Less than 3% (300 Hz to 3000 Hz) |

**[Receiver]**

| | |
|---|---|
| **Circuitry** | Double conversion superheterodyne |
| **Intermediate frequency** | 1st: 20.935 MHz, 2nd: 455 kHz |
| **Sensitivity** | SINAD 12 dB: Less than 0.35 μV<br>S + N/N : More than 50 dB at 1 mV input |
| **Selectivity** | More than 12 kHz (−6 dB)<br>Less than 24 kHz (−60 dB) |
| **Spurious response** | Better than 70 dB (except fd-IF/2) |
| **Squelch sensitivity** | Less than 0.125 μV (threshold) |
| **Scan stop level** | Less than 0.2 μV (threshold) |
| **Output** | More than 1.5 W across 8 ohms load (5% distortion) |
| **External speaker impedance** | 8 ohms |

**[DCL control]**

| | |
|---|---|
| **Code** | NRZ equal-length code |
| **Modulation** | MSK modulation |
| **Frequency deviation** | ± 3.5 kHz reference |
| **Mark frequency and deviation** | 1200 Hz ± 200 PPM |
| **Space frequency and deviation** | 1800 Hz ± 200 PPM |
| **Code transmission speed and deviation** | 1200 bits/second ± 200 PPM |

**Note:** Circuit and rating are subject to change without notice due to development in technology.


TRIO-KENWOOD CORPORATION

Shionogi Shibuya Building, 17-5, 2-chome Shibuya, Shibuya-ku, Tokyo 150, Japan

TRIO-KENWOOD COMMUNICATIONS
1111 West Walnut Street, Compton, California 90220, U.S.A.

TRIO-KENWOOD COMMUNICATIONS
DIVISION OF TRIO-KENWOOD ELECTRONICS GmbH
Rembrücker Str. 15, 6056 Heusenstamm, West Germany

TRIO-KENWOOD ELECTRONICS, N.V.
Leuvensesteenweg 504, B-1930 Zaventem Belgium

TRIO-KENWOOD (AUSTRALIA) PTY. LTD. (INCORPORATED IN N.S.W.)
4E. Woodcock Place, Lane Cove, N.S.W. 2066, Australia